TEST REPORT

TEST OF A NON CATALYTIC SINGLE BURN RATE WOOD BURNING FIREPLACE FOR EMISSIONS AND EFFICIENCY

PER EPA METHODS 28R AND ASTM E2515 and ASTM E2780, MAY 2015

Client: Energy Distribution
Model name: Invicta Gaya Ardoise

Attention: Rafaël Sanchez

TESTED BY:

Services Polytests Inc.
695-B Gaudette
St-jean-sur-Richelieu, QC, J3B 7S7

TEST DATES: May 5th & 6th 2020
REPORT DATE: May 14th 2020
Project number: PI-20231

Tested: written by:

Maxime Martin Danick Power, P. Eng

Verified by third party certifier (CSA):

SUMMARY

List of appendix

1 INTRODUCTION

1.1 GENERAL

Laboratory

- Location: Services Polytests Inc., 695-B Gaudette St-jean-sur-Richelieu QC, Canada J3B 7S7
- Elevation: 100 feet above sea level

Test program

- Purpose: unit qualification NSPS 2020
- Test dates: May 5th & 6th 2020
- Test methods used:
    - Particulate emissions: ASTM E2780-10 ; ASTM E2515-11 methods 28R as referred into 40 CFR Part 60 Subpart AAA
    - Efficiency: CSA B415.1-10

1.2 TEST UNIT INFORMATION

General

- Manufacturer: Energy Distribution
- Product type: non-catalytic single burn rate wood burning Stove
- Combustion system: non-catalytic, with post combustion
- Unit tested: Invicta Gaya Ardoise

The firebox is made of cast iron. The unit uses primary and secondary air for combustion. None of the combustion air offer any control to the hand user.

The primary air intake is located at the top of the glass door. Secondary intake is at the back of the stove moving into a heat exchanger at the back of the firebox. There is no user control for both primary and secondary air.

The primary air is fed to the fire through a thin air wash at the top the glass door.

The same firebox will have different Esthetic for different model name listed below. For all drawings and Esthetic details and difference, refer to appendix 15:

1. Model tested with pedestal : Gaya Ardoise
2. Alternative model with three legs: Itaya
3. Alternative model without legs: Onyx
4. Alternative model with different Esthetic exterior panel : Gaya Feuille
5. Alternative model with different Esthetic exterior panel : Symphonia
6. Alternative model with different Esthetic exterior panel : Antaya
7. Alternative model with different Esthetic exterior panel : Theïa
8. Alternative model with different Esthetic exterior panel : Akan

1.3 Results

Emission results obtained

- Average emission rate: 1.9 grams/hour
- Average efficiency HHV: 62.5 %

Conformity: NSPS Phase 2015

1.4 Pretest information

Unit condition: The unit was received by carrier first week of April 2020. The 50hrs of aging is made by Polytests as preliminary results tests. (All data in Appendix 4).

Set up

- Venting system type: 7 inch flue
- System height from floor: 15 feet
- Particularities: model tested Gaya Ardoise

Break in period

- Duration: the unit was pre burned by Services Polytests and run for at least 48 hours, adequate documentation of fuel additions, flue and unit temperatures recorded.
- Fuel: BC FIR between 19% and 25%

2 Summary of test results

2.1 Emissions

Run Number	Test Date (AAA-MM-DD)	Burn Rate (kg/hr)	Emission Rate (g/hr)	Heating Efficiency (% Overall)	1st hour Emission Rate (g/hr)	CSA B415.1 CO emission Gr/hr
1	2020-05-05	3.02	1.99	63.5	2.16	164.24
2	2020-05-06	2.89	1.80	61.4	2.88	210.11

2.2 AVERAGE CALCULATION

Test No.	Burn Rate (Kg/hr)	(E) Ave. Emission Rate g/hr	(OHE) %	Heat Output (BTU/HR)	CSA B415.1 CO emission g/min
1	3,02	1,99	63,5%	36 774	2,7
2	2,89	1,80	61,4%	33 282	3,5
Weighted particulate emission average of 2 test runs: 1.9 grams per hour.					
Weighted average HHV efficiency of 2 test runs: 62.5 %.					
Average Co 3.1 gr/min					

2.3 TEST FACILITY CONDITIONS

Run Number	Room Temperature		Barometric pressure		Relative humidity		Air Velocity	
	Before (F)	After (F)	Before (in.Hg)	After (in.Hg)	Before (%)	After (%)	Before (ft/min)	After (ft/min)
1	68	73	29,796	29,766	22,5	21,6	0	0
2	74	79	29,766	29,737	20,8	21,1	0	0

2.4 FUEL QUALITIES

Run Number	Pre-test Load			Test Load						
	Loading Weight Wet Basis (lbs)	Moisture Content Dry Basis (%)	Coal bed Weight (lbs)	Weight Wet Basis (lbs)	Density Wet Basis (lbs/cuft)	Moisture Content Dry Basis (%)	Piece Length (in.)	Number of 2X4's	Number of 4x4's	Number of Spacers
1	17,78	20,34	3,4	15,93	6,897	19,58	25	2	1	12
2	17,33	20,54	3,3	16,43	7,114	20,16	25	2	1	12

2.5 DILUTION TUNNEL FLOW RATE MEASUREMENTS AND SAMPLING DATA (ASTM E2515)

Average dilution tunnel measurements				Sample Data			
Run Number	Burn Rate (Min)	Volumetric Flow Rate (dscf/min)	Total Temperatures (°R)	Volume sampled (DSCF)		Particulate catch (mg)	
				1	2	1	2
1	120	334,41	578,99	20,462	20,518	2,10	2,00
2	129	359,06	576,75	22,485	22,377	1,90	1,90

2.6 DILUTION TUNNEL DUAL TRAIN PRECISION

Run Number	Sample Ratio		Total Emission (g)		
	Train 1	Train 2	Train 1	Train 2	% Deviation
1	1961,21	1955,78	4,08	3,87	2,61%
2	2060,01	2069,93	3,87	3,89	0,26%

2.7 GENERAL SUMMARY OF RESULTS

Run Number	Burn Rate (kg/hr)	Average Surface Temperature (F)	Change in surface Temperature (F)	Initial Draft (in. H^2O)	static pressure tunnel (in. H^2O)	Primary Air Setting	Run Time (min)
1	3,022	476,29	-64,3	0,019	0,170	fix	120
2	2,886	463,37	-69,7	0,020	0,180	fix	129

3 PROCESS DESCRIPTION

3.1 DISCUSSION

This stove as no optional fan, it is offer in 8 different esthetics refer to appendix 15 (Alternative Esthetic comparison) for all details.

3.2 UNIT DIMENSIONS

Baffle

- Location: between top of combustion chamber and hearth
- Dimensions: refer appendix 6 page 31
- Material: Mild Steel ¼ inch thick. Wool 1-inch tick on top of he baffle.

Bricks

- None, firebox all made of cast iron, no refractory inside.

Flue gas exhaust

- Location: top flue
- Dimensions: 7 in. diameter
- Material: cast iron 3/16 inches thick.

Gasket

- Location:
- Glass panel on the Door fiberglass, round 5mm diameter x 2.2 m long

Overall unit dimension:

- Firebox dimensions: (semi-Ellipse shape) 1200 mm wide x 503 mm deep x 1143 mm height
- Usable volume: 2.32 cuft

Convection fan:

- none

Catalyst: none

3.3 AIR SUPPLY SYSTEM

Description

This stove has a non-adjustable primary air above the glass door and a non-adjustable secondary air from the back of the stove. All details in appendix 6

- Primary air: window wash design into a cast iron pieces located at the top of the glass door.
- Secondary air: air baffle vertically located at the back of the firebox.

Characterization

The following table shows the inlet and outlet sections of each system. The air introduction system number is referred to on a set of drawings in Appendix 6.

AIR INTRODUCTION SYSTEM		INLET (1) sq. in.			OUTLET (sq. in.)
Identification	Type	Imin	Imax	Controlled	
APPENDIX 14 SHARED and PA	Primary	1.21	1.21	None	2.58
APPENDIX 14 SHARED and SA	Secondary	1.21	1.21	None	1.18
Appendix 14 TA	Pilot	None	None	None	None

* This section would be filled by measuring and comparing with the manufacturer's drawings included in the test report.

<u>Legend</u>

Identification: Tag name referred to on drawings in Appendix 14, section airflow pattern
Type: Characterization of air intake
Imin: Minimum air intake of a particular air channel
Imax: Maximum air intake of a particular air channel
Controlled: Determines if a provision for air control is present
Outlet: Total air outlet of a particular air channel

3.4 OPERATION DURING TEST

Run #1
This run was performed on May 5th 2020. It lasted 120 minutes and a 3.02 kg/hr burn rate was obtained & emission at 1.99 gr/hr.

Run #2
This confirmation run was performed on May 6th 2020. It lasted 129 minutes and a 2.89 kg/hr burn rate was obtained & emission at 1.8 gr/hr.

- Details: Refer to the front page of each test run data sheets found in appendix for the detailed test sequence showing air supply settings and adjustments, fuel bed adjustments and operational specifics of the test unit.

Test fuel cribs

- Type of wood: Douglas fir, grade C or better, 19 to 25% dry basis moisture content
- Description: for each test, description of the fuel crib is found on the front page of each test run data sheet together with photograph in appendix.

3.5 START-UP OPERATION

The complete manufacturer's firing procedure of each burn rate category is fully described in appendix 13.

3.6 SAMPLING LOCATIONS

Particulate samples are collected from the dilution tunnel at a point 15 feet from the tunnel entrance. The tunnel has two elbows and two mixing baffles in the system ahead of the sampling section. The sampling section is a continuous 15 foot section of 8 inch diameter pipe straight over its entire length. Tunnel velocity pressure is determined by a standard pitot tube located 48 inches from the beginning of the sampling section. Thermocouple is installed on the Pitot tube to measure the dry bulb temperature. MC is assumed, as allowed, to be 4%. Tunnel samplers are located 56 inches downstream of the Pitot tube and 16 inches upstream from the end of this section.

3.7 DRAWINGS

Various drawings of the stack gas sampling train and of dilution tunnel system are found in Appendix 1.

3.8 EMISSIONS EFFICIENCY TESTING EQUIPMENT LIST

The complete test equipment list together with all corresponding calibration data can be found in Appendix 3.

4 SAMPLING METHODS

4.1 PARTICULATE SAMPLING

Particulates were sampled in strict accordance with ASTM E2515. This method uses two identical sampling systems with Gelman A/E 61631 binder free (or equivalent), 47 mm diameter filters. The dryers used in the sample systems are filled with "Drierite" before each test run.

5 QUALITY ASSURANCE

5.1 INSTRUMENT CALIBRATION

5.1.1 GAS METERS

At the conclusion of each test program the gas meters are verified using the reference dry gas meter. This process involves sampling the train operation for 1 cubic foot of volume. With readings made to .01 fr', the resolution is 1 %, giving an accuracy higher than the 2% required by the standard.

5.1.2 SCALES

Before each test program, the different scales used are checked with traceable calibration weights to ensure their accuracy.

5.1.3 GAS ANALYZERS

The continuous analyzers are zeroed and spanned before each test with NBS traceable gases. A mid-scale multi-component calibration gas is then analyzed (values are recorded). At the conclusion of a test, the instruments are checked again with zero, span and calibration gases (values are recorded only). The drift in each meter is then calculated and must not exceed 5% of the scale used for the test.

5.2 TEST METHOD PROCEDURES

5.2.1 LEAK CHECK PROCEDURES

Before and after each test, each sample train is tested for leaks. Leakage rates are measured and must not exceed 0.02 CFM or 4% of the sampling rate. Leak checks are performed checking the entire sampling train. Pre-test and post-test leak checks are conducted with a vacuum of 5 inches of mercury. Vacuum is monitored during each test and the highest vacuum reached is then used for the post-test vacuum value. If leakage limits are not met, the test run is rejected. During these tests, the vacuum is typically less than 2 inches of mercury. Thus, leakage rates reported are expected to be much higher than actual leakage during the tests.

5.2.2 TUNNEL VELOCITY FLOW MEASUREMENT

The tunnel velocity is calculated from a center point pitot tube signal multiplied by an adjustment factor. This factor is determined by a traverse of the tunnel as prescribed in EPA Method 1. Final tunnel velocities and flow

rates are calculated from EPA Method 2, Equation 6.9 and 6.10. (Tunnel cross sectional area is the average from both lines of traverse.)

Pitot tubes are cleaned before each test and leak checks are conducted after each test.

5.2.3 PM SAMPLING PROPORTIONALITY (ASTM E2515)

Proportionalities were calculated in accordance with ASTM E2515. The data and results are found in appendix.

APPENDIX 1: Raw data, forms and results

Paramètres

Tous les facteurs de corrections et autres paramètres qui peuvent être modifiés par l'utilisateur du fichier sont regroupés ici.

Code verrouillage:	INV

Description du test

Test standard	EPA	
Run #	1	
Date	05-05-2020	
Technicien	M.M	
Project #	PI 20231	

Description de l'unité

Manufacturier	INVICTA	
Modèle	GAYA	
Combustion system	Non-Cat	
Appliance type	FIREPLACE	
Firebox volume	2,31	cu ft.
Appliance weight empty	N.A	lbs
Appliance weight full	N.A	lbs

Paramètres du test

Logging time	1	min
Manufacturer's rated heat output	N.A	BTU/h Donnée fournie par le manfacturier
Targeted category	4	
Targeted output	N.A	BTU/h
Cp steel	N.A	BTU/lb-°F

Échantillonnage

Blank sampling rate	0,20	cuft/min
Internal probe diameter	0,18	in.
Calibration Factor (DGM #1):	0,995	Dimensionless
Equipment number (DGM #1):	EM 178	
Calibration Factor (DGM #2):	0,990	Dimensionless
Equipment number (DGM #2):	EM 179	
Calibration Factor (DGM #3):	0,997	
Equipment number (DGM #3):	EM 070	Dimensionless

Tunnel

Targeted tunnel flow rate	350	scfm
Tunnel diameter	8	in.
Molecular weight	28,78	May be assumed to be 28,78 (EPA) Si B-415 = 29
Pitot tube type	Standard	
Pitot tube coefficient	0,99	Dimensionless

Project nu.	PI 20231
Date	05-05-2020
Technicien	M.M

Fuel data

Fuel type	Dimension	
Fuel specie	D. Fir	
HHV	19810,0	kJ/kg
%C	48,7	
%H	6,9	
%O	43,9	
%Ash	0,5	
HHV	8519,2	Btu/lb
LHV	7451,0	Btu/lb

Default Fuel Values

	D. Fir	Oak/Maple
HHV	19 810	19 887
%C	48,73	50
%H	6,87	6,6
%O	43,9	42,9
%Ash	0,5	0,5
HHV (Btu/lb)	8519	8552
LHV (Btu/lb)	7451	7480

	Start	End
Barometer (kPa):	100,9	100,8
Barometer (in.Hg):	29,795759	29,7662288
Dry Bulb (F):	71,1	73,4
Humidity (%):	22,5	21,6
Air velocity (ft/min)	0	0

DGM #1	Final:	8015,346	cuft	Final:	226969,310	Liter
	Initial:	7993,955	cuft	Initial:	226363,590	Liter
DGM #2	Final:	5715,299	cuft	Final:	161839,250	Liter
	Initial:	5693,749	cuft	Initial:	161229,020	Liter
DGM room				Final:	181,590	cuft
				Initial:	164,480	cuft

Numéro de la ligne dans "Raw data" à partir duquel les données du VRAI test commencent: 209

Autres données à rentrer: dans preload data, load data, traverse et filter set weight

Project nu.	PI 20231
Date	05-05-2020
Technicien	M.M

Preload data sheet

Test Load Weight:

Lower	Ideal	Upper
14,55	16,17	17,79

Load Volume: 0,5671 cu. ft

Loading Density: 7,698 lbs./ft3

Number of Spaces:

Spacer weight (lbs):

Load Density (wet): 31,354 lbs./ft3

Dry Wood Density: 26,055895

Piece Size (in): Thick	Wide	x Length	Weight lbs	Meter Moisture Content Dry Uncorrected %					Ave. MC x Weight	Volume Cubic Inches
2	4	6,5	0,906	20,9		21,1		21,6	19,2072	52,00
2	4	6,5	0,916	20,8		20,6		20,7	18,9612	52,00
2	4	9	1,272	21,1		21		21	26,7544	72,00
2	4	9	1,412	21		21		21,6	29,9344	72,00
2	4	9	1,3	21,9		20,9		21	27,646667	72,00
2	4	9	1,306	19,9		19,6		19,9	25,8588	72,00
2	4	9	1,25	20,8		20,4		20,8	25,833333	72,00
2	4	9	1,24	20,9		20,6		20,9	25,792	72,00
2	4	18,5	2,686	19,9		19,3		19,6	52,6456	148,00
2	4	18,5	2,746	19,5		19,4		19,8	53,730067	148,00
2	4	18,5	2,748	20		20		20,3	55,2348	148,00
										0,00
										0,00
										0,00
										0,00
										0,00
										0,00
										0,00
										0,00
										0,00
										0,00
										0,00
										0,00
										0,00
										0,00
										0,00
										0,00
										0,00
										0,00
										0,00
										0,00
										0,00
								SUM MC:	361,59847	

PreTest Load Weight: 17,78 lbs.

Dry Weight: 6,70 kg.

Average Moisture Content: %

Dry: 20,34

20,34

Must be 18-28

Wet: 16,90

must be 15,2-22

Project nu.	PI 20231
Date	05-05-2020
Technicien	M.M

FUEL LOAD DATA SHEET, CSA B415

Test Load Weight:

Lower	Ideal	Upper
14,6	16,2	17,8

* For boilers, a loading density factor of 10 lb/ft3 is applied

Load Volume: 0,46 cu. ft

Loading Density: 6,9 lbs./ft3

Number of Spaces: 12

Spacer weight: lbs

Load Density (wet): 34,8 lbs./ft3

Dry Wood Density: 29,1 lbs./ft3

Piece Size (in): Thick	Wide	Length	Weight lbs	Meter Moisture Content Dry Uncorrected %					Ave. MC x Weight	Volume Cubic Inches	Ave. MC %
1,5	3,5	25	2,64	19,60	19,20	19,10	19,20	19,20	50,80788	131,25	19,3
1,5	3,5	30	2,79	19,40	19,20	19,00	19,10	19,10	53,37976	157,50	19,2
3,5	3,5	30	9,22	20,00	19,90	19,60	19,40	19,80	182,04228	367,50	19,7
1,5	0,75	5	0,13			20,10			2,5728	5,63	20,1
1,5	0,75	5	0,10			19,60			1,96	5,63	19,6
1,5	0,75	5	0,09			19,40			1,8236	5,63	19,4
1,5	0,75	5	0,09			19,20			1,8048	5,63	19,2
1,5	0,75	5	0,11			20,80			2,2464	5,63	20,8
1,5	0,75	5	0,11			20,70			2,3598	5,63	20,7
1,5	0,75	5	0,11			19,90			2,1094	5,63	19,9
1,5	0,75	5	0,11			19,80			2,2572	5,63	19,8
1,5	0,75	5	0,11			19,80			2,0988	5,63	19,8
1,5	0,75	5	0,10			19,70			2,0488	5,63	19,7
1,5	0,75	5	0,11			20,40			2,2032	5,63	20,4
1,5	0,75	5	0,11			20,30			2,233	5,63	20,3
										0,00	
										0,00	
										0,00	
										0,00	
										0,00	
										0,00	
										0,00	
										0,00	
										0,00	
										0,00	
										0,00	
										0,00	
										0,00	
										0,00	
										0,00	
								SUM MCx	311,94772		19,9 %

Test Load Weight: 15,93 lbs.

Dry Weight: 6,04 kg.

Average Moisture Content: %

Dry: 19,58 Dry(EPA) 19,58

Dry(B415 19,58

19,58

Must be 19-25

Wet: 16,37

must be 15,2-22

Coal Bed Range: 3,2 lbs. to 4,0 lbs.

TEST CHARGE:

Coal bed weight: 3,4 lbs.

Project nu.	PI 20231
Date	05-05-2020
Technicien	M.M

Filter set weight

	System 1 (g) 1st hour				System 1 (g)				System 2 (g)				Ambient blank (g)	Date	Heure
	probe	front	back	gasket	probe	front	back	gasket	probe	front	back	gasket	Filter		
Number	3	42	43	4	39	44	100	12	42	101	102	44	103		
Before (1)															
Before (2)															
Before (3)															
Before (4)															
Before (5)	61,4556	0,1302	0,1271	34,4871	110,2780	0,1261	0,1284	36,0353	110,3155	0,1281	0,1292	35,4409	0,1305	2020-05-04	17:00
Before (6)	61,4556	0,1303	0,1272	34,4872	110,2780	0,1262	0,1283	36,0354	110,3154	0,1282	0,1292	35,4410	0,1304	2020-05-05	08:00
After (1)	61,4562	0,1307	0,1272	34,4897	110,2784	0,1268	0,1285	36,0371	110,3160	0,1294	0,1290	35,4422	0,1309	2020-05-05	14:00
After (2)	61,4556	0,1304	0,1267	34,4892	110,2780	0,1264	0,1282	36,0365	110,3154	0,1292	0,1290	35,4422	0,1306	2020-05-11	08:00
After (3)	61,4556	0,1304	0,1267	34,4887	110,2780	0,1264	0,1282	36,0364	110,3154	0,1292	0,1291	35,4422	0,1305	2020-05-12	08:00
After (4)	61,4556	0,1304	0,1267	34,4887	110,2780	0,1264	0,1282	36,0364	110,3154	0,1292	0,1291	35,4422	0,1305	2020-05-13	08:00
After (5)															
After (6)	61,4556	0,1304	0,1267	34,4887	110,2780	0,1264	0,1282	36,0364	110,3154	0,1292	0,1291	35,4422	0,1305	2020-05-13	08:00
Difference	0,0000	0,0001	-0,0005	0,0015	0,0000	0,0002	-0,0001	0,0010	0,0000	0,0010	-0,0001	0,0012	0,0001		
Total (mg)		1,1				2,2				2,1			0,1		
Total ajusté (mg)		**1,00**				**2,10**				**2,00**					

Project nu.	PI 20231
Date	05-05-2020
Technicien	M.M

SFBA EPA EMISSION RESULTS

Test Duration: **120** min

PRESSURE FACTOR:	DGM 1	0,96560	
	DGM 2	0,97083	
	DGM 3	0,99535	
TEMPERATURE FACTORS	DGM 1	0,99534	
	DGM 2	0,99039	
	DGM 3	0,99843	
VOLUMES SAMPLED	DGM 1	20,462	SCft
	DGM 2	20,518	Scft
	DGM 3	16,956	SCft

TOTAL TUNNEL VOLUME : 40129

SAMPLE RATIOS

Sample Train 1:	1961,212
Sample Train 2:	1955,781

Paticulate concentration

Sample Train 1	**0,000108**	g/dscf
Sample Train 2	**0,000102**	g/dscf
Room	**0,000006**	g/dscf

TOTAL EMISSIONS

Sample Train 1	**4,08**	g
Sample Train 2	**3,87**	g

EMISSION RATES

Sample Train 1	**2,04**	g/hr
Sample Train 2	**1,94**	g/hr
1st hour emission rate	**2,16**	g/hr

	Train 1	Train 2
Cs	0,0001075	0,000102347

RESULTS

Average emission rate: 1,99 g/hr

Burn Rate : 3,022 Dry kg/hr

BAROMETRIC PRESSURE

Average:	29,780994	in Hg
Start:	29,795759	in Hg
End:	29,766229	in Hg

DGM CONTROLLER VALUES

DGM 1	Final:	8015,346	Cuft
	Initial:	7993,955	Cuft
DGM 2	Final:	5715,299	Cuft
	Initial:	5693,749	Cuft
DGM #3	Final:	181,590	Cuft
	Initial:	164,480	Cuft

TEMPERATURES

DGM 1	530,472	°R
DGM 2	533,121	°R

CALIBRATION FACTORS

DGM 1	0,9953
DGM 2	0,9903
DGM #3	0,9972

TUNNEL FLOW RATE: 334,412 Dscfm

PARTICULATE CATCH

Total Sample Train 1:	2,20	mg
Total Sample Train 2:	2,10	mg
Total Sample Train 1 1st hour:	1,10	mg

DEVIATION: 2,61%

*		*	*	*	*	*1	*2	*3	*4	*5	*6	*7	*8	Mass flow 1	DGM 1	DGM 1	Filter 1	Mass flow 2	DGM 2	DGM 2	Filter 2
Elapsed		Weight				Flue	Room	Tunnel	Unit	Unit	Unit	Unit	Unit	Reading	Inlet T	Outlet T	Temp	Reading	Inlet T	Outlet T	Temp
Time	Raw data row	Remaining	CO	CO_2	O_2	Gas	Temp	Dry Bulb	Top	Back	R.Side	L.Side	Bottom								
min		lbs	%	%	%	°F	°F	°F	°F	°F	°F	°F	°F	cuft/min	oF	oF	oF	cuft/min	oF	oF	oF
0,00	209,00	16,2	0,2	1,6	0,0	506,4	68,1	174,7	545,6	404,7	604,8	582,1	133,0	0,17	68,01	68,01	85,05	0,17	68,89	69,08	82,36
1,0	210,0	15,6	0,2	3,5	0,0	560,3	67,8	125,6	538,1	408,4	575,5	554,1	125,1	0,17	68,34	68,02	84,60	0,17	68,81	69,07	82,00
2,0	211,0	15,4	0,3	7,0	0,0	578,2	68,1	120,4	533,1	411,4	551,4	529,0	119,1	0,17	68,39	67,98	83,93	0,17	68,72	69,03	82,20
3,0	212,0	15,2	0,4	8,2	0,0	650,1	67,6	123,2	534,9	414,6	529,7	507,6	115,3	0,17	68,42	67,96	83,15	0,17	68,83	69,01	84,87
4,0	213,0	14,9	0,5	11,8	0,0	711,9	68,0	127,7	549,0	415,5	513,9	492,7	113,4	0,17	68,50	68,00	82,45	0,17	68,95	69,07	86,37
5,0	214,0	14,6	0,6	12,9	0,0	753,0	68,1	133,6	570,9	417,2	502,2	487,4	113,6	0,17	68,54	68,00	81,86	0,17	68,99	69,08	86,10
6,0	215,0	14,2	0,7	14,2	0,0	764,4	68,4	136,3	595,3	418,0	506,1	488,5	112,8	0,17	68,63	68,02	81,43	0,17	69,16	69,16	85,68
7,0	216,0	13,9	0,6	13,7	0,0	758,1	67,9	137,1	611,5	418,3	503,8	477,8	111,8	0,17	68,66	68,02	80,99	0,17	69,20	69,19	85,22
8,0	217,0	13,7	0,5	13,3	0,0	754,5	67,7	136,1	628,2	419,5	499,8	470,8	112,1	0,17	68,73	68,06	81,53	0,17	69,36	69,26	84,77
9,0	218,0	13,4	0,4	13,0	0,0	753,8	68,0	136,3	639,1	419,5	500,0	464,8	111,3	0,17	68,80	68,13	83,05	0,17	69,42	69,36	84,39
10,0	219,0	13,1	0,5	13,4	0,0	756,5	68,3	137,3	649,7	419,4	501,7	463,2	111,9	0,17	68,89	68,17	84,45	0,17	69,56	69,46	84,03
11,0	220,0	12,8	0,5	13,5	0,0	757,5	68,5	136,6	657,1	419,1	503,2	477,3	111,3	0,17	68,94	68,22	85,22	0,17	69,65	69,58	83,72
12,0	221,0	12,5	0,5	13,7	0,0	759,1	68,3	137,7	662,8	419,2	506,0	505,5	112,8	0,17	69,00	68,25	85,17	0,17	69,68	69,67	83,46
13,0	222,0	12,1	0,6	13,9	0,0	752,7	68,5	138,2	667,7	419,4	509,6	528,4	111,5	0,17	69,07	68,27	84,83	0,17	69,76	69,75	83,28
14,0	223,0	11,9	0,5	13,5	0,0	754,2	68,3	136,9	670,3	419,1	513,1	526,3	113,5	0,17	69,19	68,35	84,33	0,17	69,98	69,86	83,10
15,0	224,0	11,6	0,4	13,4	0,0	756,5	68,5	136,6	672,5	419,6	517,4	522,2	111,1	0,17	69,42	68,49	83,87	0,17	70,34	70,05	82,94
16,0	225,0	11,3	0,4	13,4	0,0	756,4	68,8	137,4	675,6	419,7	522,1	519,1	110,9	0,17	69,50	68,54	83,43	0,17	70,51	70,25	82,77
17,0	226,0	11,0	0,4	13,5	0,0	757,9	68,5	136,7	681,1	420,4	528,0	518,4	111,2	0,17	69,57	68,59	83,02	0,17	70,59	70,35	82,64
18,0	227,0	10,8	0,4	13,7	0,0	760,5	69,0	137,0	688,1	421,1	542,6	522,9	117,4	0,17	69,76	68,74	82,57	0,17	70,90	70,55	82,53
19,0	228,0	10,5	0,6	14,0	0,0	764,1	68,5	136,4	692,6	422,1	560,5	527,9	117,0	0,17	69,80	68,85	82,20	0,17	71,06	70,76	82,44
20,0	229,0	10,2	0,6	14,0	0,0	766,7	68,1	138,4	695,8	422,4	577,9	531,6	114,8	0,17	69,88	68,95	81,88	0,17	71,27	71,02	82,37
21,0	230,0	9,9	0,6	14,2	0,0	772,3	68,4	139,2	700,9	422,5	596,8	538,2	115,3	0,17	69,91	69,03	81,64	0,17	71,30	71,21	82,31
22,0	231,0	9,6	0,6	14,1	0,0	769,4	68,5	139,3	701,9	423,9	612,0	547,3	113,0	0,17	70,06	69,14	81,52	0,17	71,55	71,36	82,26
23,0	232,0	9,4	0,6	14,2	0,0	766,8	68,6	139,2	700,2	425,5	626,5	565,2	113,2	0,17	70,20	69,28	81,38	0,17	71,89	71,61	82,23
24,0	233,0	9,1	0,7	14,1	0,0	765,4	69,0	138,3	700,1	425,6	640,6	593,8	116,4	0,17	70,23	69,34	81,25	0,17	71,75	71,77	82,19
25,0	234,0	8,8	0,7	14,0	0,0	763,2	68,9	138,7	700,3	427,1	654,3	622,4	114,3	0,17	70,31	69,49	81,26	0,17	72,00	71,97	82,20
26,0	235,0	8,6	0,6	14,0	0,0	762,2	68,8	139,3	703,5	427,8	666,5	644,7	113,4	0,17	70,28	69,55	81,87	0,17	71,81	72,10	82,23
27,0	236,0	8,3	0,6	14,1	0,0	769,9	69,3	137,1	704,3	429,7	674,9	666,9	112,7	0,17	70,43	69,66	83,47	0,17	72,04	72,29	82,18
28,0	237,0	8,1	0,5	14,4	0,0	774,4	68,8	138,5	708,6	431,8	685,5	683,6	112,3	0,17	70,43	69,70	84,99	0,17	71,95	72,37	82,15
29,0	238,0	7,8	0,5	14,5	0,0	784,6	68,7	139,4	714,1	433,1	695,2	698,4	112,1	0,17	70,52	69,75	85,59	0,17	72,25	72,48	82,14
30,0	239,0	7,6	0,4	14,6	0,0	784,9	69,2	140,3	715,9	434,6	704,3	713,8	113,8	0,17	70,59	69,82	85,45	0,17	72,21	72,59	82,18
31,0	240,0	7,4	0,4	14,5	0,0	769,9	68,5	139,4	719,7	436,2	712,2	726,6	113,4	0,17	70,61	69,84	85,01	0,17	72,17	72,67	82,20
32,0	241,0	7,1	0,5	14,1	0,0	756,5	68,4	137,4	720,5	437,4	718,8	737,7	113,6	0,17	70,26	69,88	84,65	0,17	71,88	72,76	82,21
33,0	242,0	6,9	0,4	13,7	0,0	747,0	68,6	136,6	717,2	439,2	726,0	747,9	114,1	0,17	70,12	69,94	84,30	0,17	72,02	72,99	82,20
34,0	243,0	6,7	0,4	13,2	0,0	733,7	68,2	135,6	710,5	441,1	730,2	756,0	113,7	0,17	70,32	70,02	84,00	0,17	72,37	73,21	82,20
35,0	244,0	6,5	0,4	12,9	0,0	722,1	68,7	133,9	707,1	443,3	733,6	762,9	112,8	0,17	70,54	70,06	83,73	0,17	72,43	73,36	82,27
36,0	245,0	6,4	0,2	12,6	0,0	709,7	68,8	132,6	699,5	445,0	735,3	762,5	112,6	0,17	70,59	70,08	83,40	0,17	72,27	73,38	82,27
37,0	246,0	6,2	0,2	12,2	0,0	695,7	68,5	131,0	689,3	447,8	737,9	754,0	113,7	0,17	70,71	70,14	83,13	0,17	72,45	73,48	82,32
38,0	247,0	6,0	0,2	11,8	0,0	683,9	68,5	130,3	679,3	450,8	738,5	746,1	112,8	0,17	70,83	70,16	82,83	0,17	72,56	73,60	82,30
39,0	248,0	5,9	0,1	11,4	0,0	674,6	69,1	129,1	669,1	452,5	739,4	740,2	113,0	0,17	70,89	70,21	82,59	0,17	72,49	73,65	82,31
40,0	249,0	5,7	0,1	11,2	0,0	666,6	69,1	129,0	658,4	455,6	737,4	735,6	114,5	0,17	70,88	70,25	82,36	0,17	72,39	73,66	82,29
41,0	250,0	5,6	0,1	11,1	0,0	660,8	69,6	127,6	646,5	458,0	734,5	728,5	114,2	0,17	70,87	70,27	82,16	0,17	72,31	73,73	82,28
42,0	251,0	5,4	0,1	10,8	0,0	653,2	69,2	126,2	638,2	460,2	733,3	723,7	115,5	0,17	70,85	70,32	82,02	0,17	72,39	73,89	82,29
43,0	252,0	5,3	0,1	10,5	0,0	645,0	69,0	124,3	629,5	463,3	730,7	719,8	113,5	0,17	71,01	70,51	81,92	0,17	72,94	74,25	82,30
44,0	253,0	5,2	0,1	10,2	0,0	637,1	68,9	123,5	621,4	466,4	725,7	716,2	111,7	0,17	71,21	70,62	81,86	0,17	73,17	74,57	82,26
45,0	254,0	5,1	0,1	9,9	0,0	629,6	68,6	123,0	613,2	469,1	723,0	714,6	113,7	0,17	71,34	70,69	81,69	0,17	73,21	74,70	82,27
46,0	255,0	5,0	0,1	9,7	0,0	622,6	69,2	122,6	605,6	471,3	719,6	715,3	114,1	0,17	71,35	70,75	81,50	0,17	73,17	74,82	82,22
47,0	256,0	4,9	0,1	9,6	0,0	618,5	69,6	119,6	599,8	473,3	716,2	715,6	115,3	0,17	71,26	70,81	81,26	0,17	73,05	74,83	84,90
48,0	257,0	4,7	0,1	9,5	0,0	614,1	69,3	120,1	594,2	475,9	716,3	714,1	114,2	0,17	71,21	70,84	82,13	0,17	73,02	74,91	86,69
49,0	258,0	4,7	0,2	9,4	0,0	608,5	69,7	118,9	587,8	478,3	712,4	717,5	113,5	0,17	71,26	70,91	83,82	0,17	73,32	75,09	86,48
50,0	259,0	4,5	0,2	9,4	0,0	605,7	69,4	119,4	581,3	480,5	710,0	721,0	113,6	0,17	71,25	70,97	85,41	0,17	73,11	75,16	86,10
51,0	260,0	4,4	0,2	9,4	0,0	602,1	69,7	119,4	575,5	482,4	706,8	724,4	116,0	0,17	71,16	70,96	85,86	0,17	72,95	75,17	85,80
52,0	261,0	4,3	0,2	9,4	0,0	597,7	69,4	119,4	570,5	484,5	703,7	727,6	114,5	0,17	71,12	70,92	85,58	0,17	72,88	75,14	85,47
53,0	262,0	4,2	0,2	9,3	0,0	595,6	69,8	118,8	563,7	485,9	701,3	729,4	114,8	0,17	71,09	70,93	85,12	0,17	72,77	75,16	85,16
54,0	263,0	4,1	0,2	9,2	0,0	593,1	69,3	118,4	559,5	486,9	697,9	735,8	115,2	0,17	71,07	70,92	84,62	0,17	72,68	75,23	84,83
55,0	264,0	4,1	0,3	9,1	0,0	590,2	69,6	118,4	555,0	488,7	696,2	739,6	114,5	0,17	71,05	70,93	84,12	0,17	72,66	75,29	84,52
56,0	265,0	4,0	0,3	9,0	0,0	585,5	69,3	117,6	552,4	489,6	694,8	741,8	116,9	0,17	71,02	70,92	83,64	0,17	72,60	75,36	84,26
57,0	266,0	3,9	0,3	8,8	0,0	580,3	69,3	116,9	549,1	490,7	693,9	742,0	115,6	0,17	71,01	70,91	83,20	0,17	72,55	75,35	83,94
58,0	267,0	3,8	0,4	8,7	0,0	575,9	69,6	116,5	545,0	491,1	692,9	742,2	116,2	0,17	71,04	70,94	82,78	0,17	72,56	75,43	83,68
59,0	268,0	3,7	0,4	8,6	0,0	573,0	69,4	116,3	540,6	491,4	691,0	740,3	116,3	0,17	71,03	70,96	82,42	0,17	72,53	75,45	83,45
60,0	269,0	3,5	0,4	8,5	0,0	568,9	69,3	113,6	538,0	491,7	689,7	738,2	114,5	0,17	71,04	71,00	73,61	0,17	72,55	75,55	83,22
61,0	270,0	3,5	0,4	8,3	0,0	566,5	69,2	114,1	535,8	491,2	687,8	733,2	116,4	0,17	71,05	71,07	74,78	0,17	72,62	75,67	82,96
62,0	271,0	3,4	0,5	8,3	0,0	562,5	69,3	113,1	530,9	492,0	684,0	731,8	115,1	0,17	71,15	71,17	76,16	0,17	72,80	75,77	82,73
63,0	272,0	3,3	0,5	8,2	0,0	559,1	69,6	113,7	526,6	491,3	681,9	728,9	116,4	0,17	71,14	71,17	77,44	0,17	72,68	75,78	82,50
64,0	273,0	3,2	0,5	8,1	0,0	557,0	69,3	113,7	522,3	491,3	680,4	726,1	116,7	0,17	71,07	71,16	78,58	0,17	72,62	75,77	82,26
65,0	274,0	3,2	0,6	8,0	0,0	553,6	69,3	112,6	518,7	490,7	678,0	722,9	115,6	0,17	71,05	71,17	79,57	0,17	72,63	75,80	83,19
66,0	275,0	3,1	0,6	7,9	0,0	550,3	69,6	112,2	515,0	489,8	676,6	718,4	117,1	0,17	71,00	71,18	80,36	0,17	72,54	75,84	86,92
67,0	276,0	3,0	0,6	7,8	0,0	549,5	69,5	112,9	509,8	488,7	675,4	714,5	116,0	0,17	70,98	71,19	81,11	0,17	72,52	75,91	87,33
68,0	277,0	2,9	0,5	7,5	0,0	550,4	69,5	113,0	508,1	487,9	674,2	712,3	117,3	0,17	70,92	71,21	81,77	0,17	72,47	75,92	86,87
69,0	278,0	2,8	0,5	7,6	0,0	551,9	69,1	113,3	506,8	486,1	672,7	710,6	116,4	0,17	70,91	71,20	82,31	0,17	72,43	75,94	86,35
70,0	279,0	2,7	0,4	7,7	0,0	552,1	69,7	113,8	504,3	484,4	672,5	707,3	117,5	0,17	70,90	71,20	82,75	0,17	72,41	75,94	85,89
71,0	280,0	2,6	0,4	7,7	0,0	552,5	69,5	113,2	504,4	482,7	670,9	703,9	117,0	0,17	70,89	71,22	83,13	0,17	72,39	75,95	85,43
72,0	281,0	2,6	0,4	7,6	0,0	553,7	69,1	113,2	502,6	480,7	670,0	704,2	119,0	0,17	70,87	71,23	83,48	0,17	72,37	75,93	85,02
73,0	282,0	2,5	0,5	7,3	0,0	552,6	69,1	112,7	498,9	478,8	669,8	705,2	117,4	0,17	70,84	71,22	83,73	0,17	72,34	75,89	84,63
74,0	283,0	2,4	0,5	7,2	0,0	550,3	69,3	113,0	495,3	476,7	667,4	704,4	118,4	0,17	70,87	71,25	83,98	0,17	72,34	75,91	84,23
75,0	284,0	2,3	0,5	7,1	0,0	547,7	69,2	112,7	491,5	474,9	665,5	704,7	118,1	0,17	70,83	71,25	84,17	0,17	72,30	75,92	83,90
76,0	285,0	2,2	0,5	7,0	0,0	545,9	69,2	111,5	488,6	472,9	662,7	704,8	117,2	0,17	70,82	71,25	84,31	0,17	72,30	75,91	83,57
77,0	286,0	2,1	0,6	7,0	0,0	543,7	69,5	111,1	485,3	470,9	661,1	703,6	118,4	0,17	70,83	71,25	84,45	0,17	72,29	75,92	83,27
78,0	287,0	2,0	0,5	7,0	0,0	541,9	69,4	112,1	482,5	468,0	658,8	700,4	120,0	0,17	70,81	71,28	84,38	0,17	72,26	75,95	83,00
79,0	288,0	2,0	0,5	7,0	0,0	541,6	69,3	111,8	478,3	466,4	655,6	701,9	118,7	0,17	70,81	71,27	84,02	0,17	72,31	75,97	82,78
80,0	289,0	1,9	0,5	7,1	0,0	542,2	69,2	111,8	477,2	464,6	653,0	699,4	118,6	0,17	70,85	71,30	83,74	0,17	72,39	76,09	82,57
81,0	290,0	1,8	0,5	7,1	0,0	542,6	69,3	111,7	475,3	462,2	650,7	694,4	119,5	0,17	70,88	71,30	83,47	0,17	72,43	76,23	82,35
82,0	291,0	1,7	0,5	7,0	0,0	542,2	69,4	112,4	473,8	460,2	649,0	689,9	119,1	0,17	70,89	71,33	83,24	0,17	72,45	76,38	82,16
83,0	292,0	1,6	0,4	7,1	0,0	545,2	68,9	111,5	475,0	458,7	647,5	686,0	119,2	0,17	70,89	71,35	83,05	0,17	72,43	76,46	84,18
84,0	293,0	1,6	0,4	7,3	0,0	549,6	69,2	112,1	476,0	456,2	646,1	683,8	119,8	0,17	70,87	71,36	82,83	0,17	72,41	76,43	86,79
85,0	294,0	1,5	0,3	7,5	0,0	554,2	69,1	112,3	478,3	453,6	646,1	680,3	121,2	0,17	70,90	71,48	82,66	0,17	72,70	76,46	86,85
86,0	295,0	1,4	0,3	7,7	0,0	554,8	69,1	112,4	479,7	451,6	644,1	680,8	120,1	0,17	71,00	71,54	82,52	0,17	72,87	76,54	86,44
87,0	296,0	1,3	0,3	7,7	0,0	553,6	69,1	112,6	480,1	449,6	642,9	678,4	120,1	0,17	71,03	71,56	82,34	0,17	72,84	76,66	86,01
88,0	297,0	1,2	0,3	7,6	0,0	547,6	69,2	112,2	479,7	447,8	641,2	676,9	120,1	0,17	71,01	71,60	82,15	0,17	72,98	76,91	85,60
89,0	298,0	1,2	0,4	7,0	0,0	535,1	68,7	110,5	477,1	445,3	639,7	682,0	118,8	0,17	71,00	71,58	82,01	0,17	72,92	76,92	85,16
90,0	299,0	1,1	0,6	6,5	0,0	519,7	69,0	109,6	470,4	444,1	635,9	685,2	120,5	0,17	71,07	71,58	81,87	0,17	72,92	76,86	84,76
91,0	300,0	1,1	0,7	5,9	0,0	507,1	69,5	109,0	462,6	442,0	632,3	681,4	119,8	0,17	71,09	71,58	81,75	0,17	72,86	76,87	84,35
92,0	301,0	1,0	0,8	5,5	0,0	497,2	68,9	107,4	457,8	440,2	627,6	673,0	119,3	0,17	71,03	71,57	81,58	0,17	72,80	76,90	83,99
93,0	302,0	1,0	0,9	5,3	0,0	489,4	68,9	106,9	451,4	438,4	623,8	664,8	119,3	0,17	70,98	71,55	81,45	0,17	72,71	76,95	83,63
94,0	303,0	0,9	1,0	5,0	0,0	482,8	69,0	106,4	447,7	436,6	619,1	656,6	118,3	0,17	70,99	71,57	81,29	0,17	72,80	76,94	83,27
95,0	304,0	0,9	1,0	4,8	0,0	477,0	69,0	105,5	442,9	434,9	614,6	648,1	117,9	0,17	70,94	71,57	81,55	0,17	72,66	76,87	82,94
96,0	305,0	0,8	1,0	4,8	0,0	471,7	68,8	104,1	438,2	433,5	610,4	641,9	116,5	0,17	70,91	71,52	81,96	0,17	72,62	76,77	82,62
97,0	306,0	0,8	1,0	4,7	0,0	466,4	68,7	103,6	435,4	431,0	605,5	636,6	117,0	0,17	70,85	71,49	82,36	0,17	72,50	76,64	82,32
98,0	307,0	0,8	1,0	4,7	0,0	462,9	68,8	102,6	431,5	428,7	601,0	633,0	118,9	0,17	70,76	71,47	82,63	0,17	72,38	76,51	84,54
99,0	308,0	0,7	1,0	4,7	0,0	460,1	68,9	101,7	428,3	426,4	597,1	627,3	119,2	0,17	70,74	71,43	82,87	0,17	72,31	76,41	87,20
100,0	309,0	0,7	1,0	4,7	0,0	456,8	69,0	102,8	424,9	424,7	593,8	623,6	118,7	0,17	70,70	71,43	83,14	0,17	72,23	76,38	86,98
101,0	310,0	0,7	1,0	4,7	0,0	453,7	68,7	102,9	421,1	422,1	590,1	618,4	118,5	0,17	70,64	71,41	83,33	0,17	72,16	76,36	86,39
102,0	311,0	0,7	1,0	4,7	0,0	451,7	68,4	101,5	418,1	420,3	585,4	615,1	116,1	0,17	70,64	71,40	83,44	0,17	72,30	76,32	85,78
103,0	312,0	0,6	1,0	4,7	0,0	448,0	68,8	101,6	414,6	417,8	581,8	610,9	118,3	0,17	70,64	71,41	83,60	0,17	72,23	76,25	85,27
104,0	313,0	0,6	1,1	4,7	0,0	447,2	68,3	101,7	411,6	415,8	578,6	607,4	117,3	0,17	70,61	71,41	83,72	0,17	72,33	76,23	84,70
105,0	314,0	0,5	1,1	4,6	0,0	444,6	68,3	101,2	408,8	414,0	575,6	604,0	116,2	0,17	70,70	71,47	83,84	0,17	72,63	76,37	84,26
106,0	315,0	0,5	1,1	4,6	0,0	442,9	68,5	100,6	405,8	411,3	572,1	601,5	117,2	0,17	70,68	71,50	83,93	0,17	72,44	76,40	83,76
107,0	316,0	0,5	1,1	4,6	0,0	440,8	68,4	101,2	403,3	408,8	569,8	596,8	117,8	0,17	70,63	71,49	83,99	0,17	72,33	76,46	83,32
108,0	317,0	0,4	1,0	4,7	0,0	440,4	68,2	99,9	400,2	407,3	566,9	593,3	115,6	0,17	70,60	71,46	84,02	0,17	72,31	76,38	82,93
109,0	318,0	0,4	1,0	4,6	0,0	437,7	68,3	99,2	398,2	405,1	563,2	590,0	115,1	0,17	70,58	71,43	84,07	0,17	72,22	76,26	82,51
110,0	319,0	0,4	1,0	4,6	0,0	434,9	68,4	99,5	395,2	403,2	560,7	586,1	116,1	0,17	70,54	71,40	84,05	0,17	72,12	76,14	82,69
111,0	320,0	0,3	1,0	4,5	0,0	433,0	68,4	98,7	392,2	400,9	557,6	583,1	116,6	0,17	70,52	71,39	83,99	0,17	72,10	76,08	86,19
112,0	321,0	0,3	1,0	4,5	0,0	430,4	68,3	99,0	390,3	398,7	554,4	578,9	115,2	0,17	70,46	71,38	84,00	0,17	72,03	76,01	87,03
113,0	322,0	0,3	1,1	4,3	0,0	427,5	68,2	99,5	386,4	396,7	550,3	575,3	114,9	0,17	70,45	71,37	83,99	0,17	72,02	76,03	86,45
114,0	323,0	0,3	1,1	4,2	0,0	425,5	68,2	98,4	384,1	394,9	546,3	571,4	114,5	0,17	70,43	71,35	83,99	0,17	71,97	75,99	85,81
115,0	324,0	0,2	1,1	4,2	0,0	423,7	67,9	98,4	381,4	392,8	542,7	567,3	114,7	0,17	70,38	71,38	83,97	0,17	72,03	75,93	85,22
116,0	325,0	0,2	1,2	4,2	0,0	422,4	68,1	97,1	378,5	390,9	537,3	564,3	115,3	0,17	70,55	71,44	83,91	0,17	72,34	75,96	84,63
117,0	326,0	0,1	1,1	4,3	0,0	421,9	68,2	97,8	376,9	388,7	534,0	560,4	116,4	0,17	70,55	71,43	83,89	0,17	72,27	75,93	84,07
118,0	327,0	0,1	1,0	4,5	0,0	421,5	68,2	96,2	374,0	386,7	530,4	559,7	114,4	0,17	70,48	71,43	83,92	0,17	72,13	75,85	83,57
119,0	328,0	0,1	1,0	4,5	0,0	420,5	68,2	97,9	371,8	384,7	528,0	557,4	114,8	0,17	70,37	71,38	83,89	0,17	72,06	75,75	83,10
120,0	329,0	0,0	1,0	4,5	0,0	420,4	68,2	97,9	369,6	383,0	524,8	556,2	115,0	0,17	70,36	71,40	83,90	0,17	72,02	75,74	82,68

Manufacturer: INVICTA
Model: GAYA

Run: 1
Project #: PI 20231
Test Duration: 120 min

	HHV	LHV
Eff	63,53%	68,66%
Comb Eff	96,37%	96,37%
HT Eff	65,92%	71,25%
Output	38 766	kJ/h
Burn Rate	3,08	kg/h
Grams CO	328	g
Input	61 022	kJ/h
MC wet	16,37	

Note: In the “Input data”, "Calc. % O_2", "Fuel Properties", and “Mass Balance” columns, [e], [d], [g], [a]. [b], [c], [h], [u], [w], [j], and [k] refer to their respective variables in Clauses 13.7.3

	Ultimate CO_2
$CO_{2\text{-}ult}$	19,64
	F_0
	1,062

Overall Heating Efficiency:	63,53%	
Combustion Efficiency:	96,37%	
Heat Transfer Efficiency:	65,92%	

Air Fuel Ratio (A/F)	
Dry Molecular Weight (M_d)	29,87
Dry Moles Exhaust Gas (N_r):	395,54
Air Fuel Ratio (A/F)	11,30

Heat Output:	36 774	Btu/h	38 766	kJ/h
Heat Input:	57 886	Btu/h	61 022	kJ/h
Burn Duration:	2,00	h		
Burn Rate:	6,79	lb/h	3,080	kg/h
Stack Temp:	596,6	Deg. F	313,6	Deg. C

POLYTESTS
TESTING THROUGH YOUR REALITY

Date: 2020-05-05 Manufacturer: InvictA Model: Gaya

Project #: pI 20231 Run: 1 Tech: MM Reviewer: DP

- 43 LBS loading START FIRE
- At 38 LBS close DOOR
- At 12 LBS insert load
- At 163 LBS close DOOR
- At 34 LBS insert load
- close DOOR immediatly

TEST LOAD CONFIGURATION

POLYTESTS
TESTING THROUGH YOUR REALITY

PRE / POST CHECKS

Date: 2020-05-05 Manufacturer: invicta Model: Gaya

Project #: pI 20231 Run: 1 Tech: MM Reviewer: SP

	Equipment #	Time	12%	22%
Moisture Meter Calibration Check:	EM-191	7:30	ok	ok

	Pre-Test	Post-Test
Facility Conditions:		
Air Velocity from less than 2 feet	0 (max50 Fpm)	0 (max50 Fpm)
Smoke Capture Check (tunnel velocity)	ok	NA
Picture (4 sides)	ok	ok
Wood Heater Conditions:		
Date Wood Heater Stack Cleaned	2020-05-05	
Date Dilution Tunnel Cleaned	2020-05-05	
Induced Draft Check (max 0.005 H2O)	ok	
Traverse before ignition	ok	
Flow Rate 140 cfm ±10%		ok
Temperature System:		
Ambient (65°-90°F)	ok °F	
Wood Heater Surface (±125°F)	ok °F	
Proportional Checks:		
Thermocouple check	ok	
Pitot Clean	ok	
Pitot verification	ok	

Sampling Train ID Numbers:	Train 1st hour	Train 1	Train 2
Probe	03	39	42
Filter Front	42	44	101
Filter Back	43	100	102
Filter Thermocouple	11	11	12
Filter (<90°F)	ok	ok	ok

POLYTESTS
TESTING THROUGH YOUR REALITY

SAMPLING EQUIPMENT CHECK OUT

Date: 2020-05-05 Manufacturer: Invicta Model: Gaya

Project #: pt 10231 Run: 1 Tech: MM Reviewer: DP

Leakage Checks Tunnel Samplers

	System 1st hour		System 1		System 2	
Unplugged Flow Rate = .25cfm	Pre-Test ASTM (-15) CSA B415 (-5)	Post-Test (max test)	Pre-Test ASTM (-15) CSA B415 (-5)	Post-Test (Max test)	Pre-Test ASTM (-15) CSA B415 (-5)	Post-Test (Max test)
Vacuum (inches Hg.)	-15	-15	-15	-15	-15	-15
Final 1minute DGM (Liter)	226362,65	226970,51	236362,78	226970,68	161228,50	161840,85
Initial 1minute DGM (Liter)	226362,64	226970,48	236362,68	226970,58	161228,30	161840,70
Change © (Liter)	0,01	0,03	0,10	0,10	0,20	0,15
Allowable leakage .04 x Sample rate or 0.28Lpm CSA B415 (0.56)						
Check OK	ok	ok	ok	ok	ok	ok

Leakage Checks Flue Gas Sampler

Plugged Probe	Pre Test	Post Test
Vacuum (inches Hg.)	-5	-5
Rotometer Reading (mml/min.)	0	0
Flow Rate (lpm)	1.5	1.5
Allowable (.02 x Sample Rate)	30	30
Check OK	ok	ok

Leakage Checks Pitot

Plugged Probe	Pre Test 3 H2o static	Pre Test 0.4-0.5 H2o velocity	Post Test 3 H2o Static	Post Test 0.4-0.5 H2o velocity
Vacuum (inches Hg.)	3	.4	3	.5
Check OK (no change after 15 sec.)	ok	ok	ok	ok

POLYTESTS
TESTING THROUGH YOUR REALITY

PRE-TEST SCALE AUDIT

Date: 2020-05-05 Manufacturer: Invict A Model: Gaya

Project #: pI 20231 Run: 1 Tech: MM Reviewer: BP

Scale Type	Audit		Measured Weight
	Equipment #	Weight	
Platform	Em-090	44 lbs, Class F	44 lbs
Wood	Em-090	44 lbs, Class F	44 lbs
Analytical	Em-128	100 mg, Class S	100 mg
Analytical	Em-129	200 g, Class S	200 g

LIMITS OF WEIGHT RANGES

ANALYTICAL SCALE: ..... 50%-150% of dry filter weight, ± 0.1 mg
PLATFORM SCALE.....20%-80% of ideal test load weight, ± 0.1 lbs or 1%
WOOD SCALE .....20%-80% of ideal test load weight, ± 0.01 lbs or 1%

POLYTESTS
TESTING THROUGH YOUR REALITY

CONTINUOUS ANALYZERS

Date: 2020-05-05 Manufacturer: Invicta Model: Gaya

Project #: pI 20231 Run: 1 Tech: MM Reviewer: DP

FOR TUNNELS < 12 in

Barometric pressure (P_{bar}) 100.9 (KPa.) Static pressure (P_q) 0.17 (inches w.c.)
Inside diameter: Port A _____ Port B _____.
Tunnel cross sectional area: .1963Ft^2
Pitot tube type: Standard

Traverse Point	Position (inches)			Velocity Head Δ_p (inches H_2O)	Tunnel Temperature (°F)
	6 po	7 po	8 po		
A- Centroid	3.00	3.50	4	0.078	65.50
B - Centroid	3.00	3.50	4	0.077	65.39
A-1	0.40	0.50	0.50	0.065	65.48
A-2	1.50	1.75	2	0.076	65.41
A-3	4.50	5.25	6	0.077	65.35
A-4	5.60	6.5	7.5	0.064	65.35
B-1	0.40	0.50	0.50	0.064	65.37
B-2	1.50	1.75	2	0.072	65.37
B-3	4.50	5.25	6	0.080	65.36
B-4	5.60	6.5	7.5	0.066	65.23
				AVERAGE	

$$v_s = K_p C_p (\sqrt{\Delta p})_{avg} \sqrt{\frac{(T_s)_{avg}}{P_s M_s}}$$

Where,
C_p = pitot tube coefficient, dimension less = 0.99 for standard pitot.
Δ_p = manometer reading (inches H_2O)
T_s = average absolute dilution tunnel temperature (°F + 460)
P_s = absolute dilution tunnel gas pressure or $P_{bar} + P_{qg}$
P_q = static pressure $\frac{\text{in. } H_2O}{\{\ 13.6\ \}}$
M_s = 28.56, wet molecular weight of stack gas (alternatively, it may be measured)
K_p = 85.49 pitot tube constant, (conversion factor for English units)

_$\Delta_p$avg. = average of the square roots of the velocity heads (Δ_p) measured at each traverse point.

POLYTESTS
TESTING THROUGH YOUR REALITY

CONTINUOUS ANALYZERS

Date: 2020-05-05 Manufacturer: Invicta Model: Gaya

Project #: PI 20231 Run: 1 Tech: MM Reviewer: BP

Pre-Test (Adjust and Record)

	ZERO		SPAN		CAL. (Record Only)	
CO	0	0	2.990	3.000	1.009	1.000
Tolerance CO	0	+/- 0.02	0.010	+/- 0.15	0.009	+/- 0.05
CO_2	0	0	18.09	18.00	9.81	10.00
Tolerance CO2	0	+/- 0.02	0.09	+/- 0.5	0.19	+/- 0.5
O_2 informative CSA B415 calculated value	na	na	na	na	na	na
	Actual	Should Be	Actual	Should Be	Actual	Should Be

Post Test (Record Only)

	Zero	Span	Cal.	Zero Drift	Limit	Span Drift	Limit	Cal. Drift	Limit	OK?	Not OK*
CO	0	2.996	1.004	0	0.02	0.006	0.15	0.005	0.05	✓	
CO_2	0	18.02	9.85	0	0.02	0.07	0.5	0.04	0.5	✓	

POLYTESTS
TESTING THROUGH YOUR REALITY

TEST DATA LOG

Date: 2020-05-05 Manufacturer: Invicta Model: Gaya

Project #: pJ 20231 Run: 1 Tech: MM Reviewer: DP

RAW DRY GAS METER READINGS

	System 1	System 2	Blanck
Final (Liter)	226 969, 31	161 839, 25	181, 59
Initial (Liter)	226 363, 59	161 229, 02	164, 48

AMBIENT CONDITIONS

	Before	After
Barometer (kPa):	100, 9	100, 8
Dry Bulb (F):	71, 1	73, 4
Humidity (%):	22, 5	21, 6

Flow Meter

	Start	End
Flow meter reading	N.A	N.A

Flow Meter Verification

	Before	After
Flow meter Check (liters)	N.A	N.A
Scale Weight (Kg)	N.A	N.A

POLYTESTS
TESTING THROUGH YOUR REALITY

FUEL DATA

Date: 2020-05-05 Manufacturer: Invicta Model: Gaya

Project #: PI 20231 Run: 1 Tech: MM Reviewer: BP

FUEL DESCRIPTION:

Type of wood:

PRE-TEST LOAD

Piece Size	Weight	Meter Moisture Content (% dry)*				
2 x 4 x 6,50 in.	0 906 lbs.	209		211		216
2 x 4 x 6,50 in.	0 916 lbs.	208		206		207
2 x 4 x 9 in.	1 272 lbs.	211		210		210
2 x 4 x 9 in.	1 412 lbs.	210		210		216
2 x 4 x 9 in.	1 300 lbs.	219		209		210
2 x 4 x 9 in.	1 306 lbs.	199		196		199
2 x 4 x 9 in.	1 250 lbs.	208		204		208
2 x 4 x 9 in.	1 240 lbs.	209		206		209
2 x 4 x 18,5 in.	2 686 lbs.	199		193		196
2 x 4 x 18,5 in.	2 746 lbs.	195		194		198
2 x 4 x 18,5 in.	2 748 lbs.	20		20		203
x x in.	lbs.					
x x in.	lbs.					
x x in.	lbs.					
x x in.	lbs.					
x x in.	lbs.					
x x in.	lbs.					
x x in.	lbs.					
x x in.	lbs.					
x x in.	lbs.					
x x in.	lbs.					
x x in.	lbs.					
x x in.	lbs.					

TEST LOAD WEIGHT: 17 78 lbs

POLYTESTS
TESTING THROUGH YOUR REALITY

FUEL DATA

Date: 2020-05-05 Manufacturer: INVICTA Model: Gaya

Project #: PI 20231 Run: 1 Tech: MM Reviewer: [illegible]

FUEL DESCRIPTION:

Type of wood :

TEST LOAD

Piece Size	Weight	Meter Moisture Content (% dry)*				
1 1/2 x 3 1/2 x 25 in.	2.638 lbs.	196	192	191	192	192
1 1/2 x 3 1/2 x 30 in.	2.786 lbs.	194	192	190	191	191
3 1/2 x 3 1/2 x 30 in.	9.222 lbs.	200	199	196	194	198
1 1/2 x 3/4 x 5 in.	0.128 lbs.			201		
1 1/2 x 3/4 x 5 in.	0.100 lbs.			196		
1 1/2 x 3/4 x 5 in.	0.094 lbs.			194		
1 1/2 x 3/4 x 5 in.	0.094 lbs.			192		
1 1/2 x 3/4 x 5 in.	0.108 lbs.			208		
1 1/2 x 3/4 x 5 in.	0.114 lbs.			207		
1 1/2 x 3/4 x 5 in.	0.106 lbs.			199		
1 1/2 x 3/4 x 5 in.	0.114 lbs.			198		
1 1/2 x 3/4 x 5 in.	0.106 lbs.			198		
1 1/2 x 3/4 x 5 in.	0.104 lbs.			197		
1 1/2 x 3/4 x 5 in.	0.108 lbs.			204		
1 1/2 x 3/4 x 5 in.	0.110 lbs.			203		
x x in.	lbs.					
x x in.	lbs.					
x x in.	lbs.					
x x in.	lbs.					
x x in.	lbs.					
x x in.	lbs.					
x x in.	lbs.					
x x in.	lbs.					
x x in.	lbs.					
x x in.	lbs.					
x x in.	lbs.					
x x in.	lbs.					

TEST LOAD WEIGHT: ~~15.85~~ lbs Min 20%: 3.20 Max 25%: 4.00

~~15.83~~ M.M

15.93 MM

POLYTESTS
TESTING THROUGH YOUR REALITY

DILUTION TUNNEL PARTICULATE SAMPLER DATA

Date: 2020-05-04 Manufacturer: invicta Model: Gaya

Project #: pI 20231 Run: 1 Tech: MM Reviewer: [illegible]

Pre-test Weight Record		SYSTEM 1 – 1st hour				SYSTEM 1				
		Probe & Housing Number	Front Filter Number	Back Filter Number	gaskets	Probe & Housing Number	Front Filter Number	Back Filter Number	gaskets	Blanck
Date	Time	03	42	43	4	39	44	100	12	103
2020-05-04	17:00	61,4556	0,1302	0,1271	34,4871	110,2780	0,1261	0,1284	36,0353	0,1305
2020-05-05	8:00	61,4556	0,1303	0,1272	34,4872	110,2780	0,1262	0,1283	36,0354	0,1304

Post-test Weight Record		SYSTEM 1 – 1st hour				SYSTEM 1				
		Probe & Housing Number	Front Filter Number	Back Filter Number	gaskets	Probe & Housing Number	Front Filter Number	Back Filter Number	gaskets	Blanck
Date	Time	03	42	43	4	39	44	100	12	103
2020-05-05	14:00	61,4562	0,1307	0,1272	34,4897	110,2784	0,1268	0,1285	36,0371	0,1309
2020-05-11	8:00	61,4556	0,1304	0,1267	34,4892	110,2780	0,1264	0,1282	36,0365	0,1306
2020-05-12	8:00	61,4556	0,1304	0,1267	34,4887	110,2780	0,1264	0,1282	36,0364	0,1305
2020-05-13	8:00	61,4556	0,1304	0,1267	34,4887	110,2780	0,1264	0,1282	36,0364	0,1305

POLYTESTS
TESTING THROUGH YOUR REALITY

DILUTION TUNNEL PARTICULATE SAMPLER DATA

Date: 2020-05-04 Manufacturer: InvictA Model: Gaya

Project #: PI 20231 Run: 1 Tech: MM Reviewer: DP

Pre-test Weight Record		SYSTEM 2			
		Probe & Housing Number	Front Filter Number	Back Filter Number	gaskets
Date	Time	42	101	102	44
2020-05-04	17:00	110 3155	0 1281	0 1292	35 4409
2020-05-05	8:00	110 3154	0 1282	0 1292	35 4410

Post-test Weight Record		SYSTEM 2			
		Probe & Housing Number	Front Filter Number	Back Filter Number	gaskets
Date	Time	42	101	102	44
2020-05-05	14:00	110 3160	0 1294	0 1290	35 4422
2020-05-11	8:00	110 3154	0 1292	0 1290	35 4422
2020-05-12	8:00	110 3154	0 1292	0 1291	35 4422
2020-05-13	8:00	110 3154	0 1292	0 1291	35 4422

Paramètres

Tous les facteurs de corrections et autres paramètres qui peuvent être modifiés par l'utilisateur du fichier sont regroupés ici.

Code verrouillage:	INV	

Description du test

Test standard	EPA	
Run #	2	
Date	06-05-2020	
Technicien	M.M	
Project #	PI 20231	

Description de l'unité

Manufacturier	INVICTA	
Modèle	GAYA	
Combustion system	Non-Cat	
Appliance type	FIREPLACE	
Firebox volume	2,31	cu ft.
Appliance weight empty	N.A	lbs
Appliance weight full	N.A	lbs

Paramètres du test

Logging time	1	min
Manufacturer's rated heat output	N.A	BTU/h Donnée fournie par le manfacturier
Targeted category	4	
Targeted output	N.A	BTU/h
Cp steel	N.A	BTU/lb-°F

Échantillonnage

Blank sampling rate	0,20	cuft/min
Internal probe diameter	0,18	in.
Calibration Factor (DGM #1):	0,995	Dimensionless
Equipment number (DGM #1):	EM 178	
Calibration Factor (DGM #2):	0,990	Dimensionless
Equipment number (DGM #2):	EM 179	
Calibration Factor (DGM #3):	0,997	
Equipment number (DGM #3):	EM 070	Dimensionless

Tunnel

Targeted tunnel flow rate	350	scfm
Tunnel diameter	8	in.
Molecular weight	28,78	May be assumed to be 28,78 (EPA) Si B-415 = 29
Pitot tube type	Standard	
Pitot tube coefficient	0,99	Dimensionless

Project nu.	PI 20231
Date	06-05-2020
Technicien	M.M

Fuel data

Fuel type	Dimension	
Fuel specie	D. Fir	
HHV	19810,0	kJ/kg
%C	48,7	
%H	6,9	
%O	43,9	
%Ash	0,5	
HHV	8519,2	Btu/lb
LHV	7451,0	Btu/lb

Default Fuel Values

	D. Fir	Oak/Maple
HHV	19 810	19 887
%C	48,73	50
%H	6,87	6,6
%O	43,9	42,9
%Ash	0,5	0,5
HHV (Btu/lb)	8519	8552
LHV (Btu/lb)	7451	7480

	Start	End
Barometer (kPa):	100,8	100,7
Barometer (in.Hg):	29,766229	29,73669881
Dry Bulb (F):	79,1	79,2
Humidity (%):	20,8	21,1
Air velocity (ft/min)	0	0

DGM #1	Final:	8039,250	cuft	Final:	227646,200	Liter
	Initial:	8015,453	cuft	Initial:	226972,350	Liter
DGM #2	Final:	5739,435	cuft	Final:	162522,690	Liter
	Initial:	5715,476	cuft	Initial:	161844,250	Liter
DGM room				Final:	200,510	cuft
				Initial:	181,590	cuft

Numéro de la ligne dans "Raw data" à partir duquel les données du VRAI test commencent: 159

Autres données à rentrer: dans preload data, load data, traverse et filter set weight

Project nu.	PI 20231
Date	06-05-2020
Technicien	M.M

Preload data sheet

Test Load Weight:

Lower	Ideal	Upper
14,55	16,17	17,79

Load Volume: ###### cu. ft

Loading Density: 7,503 lbs./ft3

Number of Spaces: na

Spacer weight (lbs):

Load Density (wet): #VALEUR! lbs./ft3

Dry Wood Density: #VALEUR!

Piece Size (in):			Weight	Meter Moisture Content					Ave. MC x	Volume
Thick	Wide x	Length	lbs	Dry Uncorrected %					Weight	Cubic Inches
2	4	6,5	0,916	21,3		21,3		21,3	19,5108	52,00
2	4	6,5	0,91	21,6		21,4		21,3	19,504333	52,00
2	4	9	1,23	21,9		22		21,8	26,937	72,00
2	4	9	1,22	21,7		20,9		21	25,864	72,00
2	4	9	1,316	20,8		20,6		20,7	27,2412	72,00
2	4	9	1,244	20,7		20,8		20,9	25,8752	72,00
2	4	9	1,232	20,5		20,8		20,8	25,5024	72,00
2	4	9	1,23	19		19,4		19,8	23,862	72,00
2	4	18,5	2,704	20,1		20,8		20,7	55,522133	148,00
2	4	18,5	2,748	19,9		19,7		19,8	54,4104	148,00
2	4	18,5	2,582	20		20		20,1	51,726067	148,00
										0,00
										0,00
										0,00
										0,00
										0,00
										0,00
										0,00
										0,00
										0,00
										0,00
										0,00
										0,00
										0,00
										0,00
										0,00
										0,00
										0,00
										0,00
										0,00
										0,00
										0,00
								SUM MC:	355,95553	

PreTest Load Weight: 17,33 lbs.

Dry Weight: 6,52 kg.

Average Moisture Content: %

Dry: 20,54

20,54

Must be 18-28

Wet: 17,04

must be 15,2-22

Project nu.	PI 20231
Date	06-05-2020
Technicien	M.M

FUEL LOAD DATA SHEET, CSA B415

Test Load Weight:

Lower	Ideal	Upper
14,6	16,2	17,8

* For boilers, a loading density factor of 10 lb/ft3 is applied

Load Volume: 0,46 cu. ft

Loading Density: 7,1 lbs./ft3

Number of Spaces: 12

Spacer weight: lbs

Load Density (wet): 35,9 lbs./ft3

Dry Wood Density: 29,9 lbs./ft3

Piece Size (in): Thick	Wide	Length	Weight lbs	Meter Moisture Content Dry Uncorrected %					Ave. MC x Weight	Volume Cubic Inches	Ave. MC %
1,5	3,5	25	2,58	19,10	19,60	19,40	19,40	19,30	49,87136	131,25	19,4
1,5	3,5	30	3,29	19,60	19,40	19,30	19,30	19,40	63,7484	157,50	19,4
3,5	3,5	30	9,17	20,40	20,60	20,80	21,00	20,90	190,14432	367,50	20,7
1,5	0,75	5	0,10			19,60			1,8816	5,63	19,6
1,5	0,75	5	0,11			19,40			2,1728	5,63	19,4
1,5	0,75	5	0,12			19,60			2,3128	5,63	19,6
1,5	0,75	5	0,10			19,50			2,028	5,63	19,5
1,5	0,75	5	0,10			19,30			1,93	5,63	19,3
1,5	0,75	5	0,13			20,10			2,6532	5,63	20,1
1,5	0,75	5	0,13			20,10			2,613	5,63	20,1
1,5	0,75	5	0,12			20,40			2,3664	5,63	20,4
1,5	0,75	5	0,15			19,10			2,9032	5,63	19,1
1,5	0,75	5	0,14			19,20			2,6496	5,63	19,2
1,5	0,75	5	0,10			19,40			1,9788	5,63	19,4
1,5	0,75	5	0,10			19,30			2,0072	5,63	19,3
										0,00	
										0,00	
										0,00	
										0,00	
										0,00	
										0,00	
										0,00	
										0,00	
										0,00	
										0,00	
										0,00	
										0,00	
										0,00	
										0,00	
										0,00	
									SUM MCx	331,26068	19,6 %

Test Load Weight: 16,43 lbs.

Dry Weight: 6,20 kg.

Average Moisture Content: %

Dry: 20,16 Dry(EPA) 20,16

Dry(B415 20,16

20,16

Must be 19-25

Wet: 16,78

must be 15,2-22

Coal Bed Range: 3,3 lbs. to 4,1 lbs.

TEST CHARGE:

Coal bed weight: 3,3 lbs.

Project nu.	PI 20231
Date	06-05-2020
Technicien	M.M

Filter set weight

	System 1 (g) 1st hour				System 1 (g)				System 2 (g)				Ambient blank (g)	Date	Heure
	probe	front	back	gasket	probe	front	back	gasket	probe	front	back	gasket	Filter		
Number	12	134	127	10	13	128	129	15	38	130	131	41	132		
Before (1)															
Before (2)															
Before (3)															
Before (4)															
Before (5)	94,5376	0,1269	0,1288	33,6046	95,1473	0,1273	0,1277	34,5891	110,4352	0,1286	0,1277	34,1760	0,1282	2020-05-05	17:00
Before (6)	94,5377	0,1270	0,1287	33,6046	95,1474	0,1274	0,1278	34,5892	110,4353	0,1285	0,1276	34,1759	0,1283	2020-05-06	09:00
After (1)	94,5394	0,1279	0,1285	33,6079	95,1487	0,1275	0,1279	34,5899	110,4358	0,1296	0,1274	34,1779	0,1286	2020-05-06	15:00
After (2)	94,5380	0,1273	0,1281	33,6061	95,1477	0,1272	0,1277	34,5899	110,4354	0,1291	0,1270	34,1778	0,1284	2020-05-11	08:00
After (3)	94,5379	0,1273	0,1281	33,6061	95,1476	0,1272	0,1277	34,5899	110,4354	0,1291	0,1270	34,1778	0,1284	2020-05-12	08:00
After (4)															
After (5)															
After (6)	94,5379	0,1273	0,1281	33,6061	95,1476	0,1272	0,1277	34,5899	110,4354	0,1291	0,1270	34,1778	0,1284	2020-05-12	08:00
Difference	0,0002	0,0003	-0,0006	0,0015	0,0002	-0,0002	-0,0001	0,0007	0,0001	0,0006	-0,0006	0,0019	0,0001		
Total (mg)		1,4				2				2			0,1		
Total ajusté (mg)		**1,30**				**1,90**				**1,90**					

Project nu.	PI 20231
Date	06-05-2020
Technicien	M.M

SFBA EPA EMISSION RESULTS

Test Duration: **129** min

PRESSURE FACTOR:	DGM 1	0,96979	
	DGM 2	0,97131	
	DGM 3	0,99437	
TEMPERATURE FACTORS	DGM 1	0,97892	
	DGM 2	0,97103	
	DGM 3	0,98727	
VOLUMES SAMPLED	DGM 1	22,485	SCft
	DGM 2	22,377	Scft
	DGM 3	18,522	SCft

TOTAL TUNNEL VOLUME : 46319

SAMPLE RATIOS

Sample Train 1:	2060,008
Sample Train 2:	2069,934

Paticulate concentration

Sample Train 1	**0,000089**	g/dscf
Sample Train 2	**0,000089**	g/dscf
Room	**0,000005**	g/dscf

TOTAL EMISSIONS

Sample Train 1	**3,87**	g
Sample Train 2	**3,89**	g

EMISSION RATES

Sample Train 1	**1,80**	g/hr
Sample Train 2	**1,81**	g/hr
1st hour emission rate	**2,88**	g/hr

	Train 1	Train 2
Cs	8,895E-05	8,93777E-05

RESULTS

Average emission rate: 1,80 g/hr

Burn Rate : 2,886 Dry kg/hr

BAROMETRIC PRESSURE

Average:	29,751464	in Hg
Start:	29,766229	in Hg
End:	29,736699	in Hg

DGM CONTROLLER VALUES

DGM 1	Final:	8039,250	Cuft
	Initial:	8015,453	Cuft
DGM 2	Final:	5739,435	Cuft
	Initial:	5715,476	Cuft
DGM #3	Final:	200,510	Cuft
	Initial:	181,590	Cuft

TEMPERATURES

DGM 1	539,370	°R
DGM 2	543,752	°R

CALIBRATION FACTORS

DGM 1	0,9953
DGM 2	0,9903
DGM #3	0,9972

TUNNEL FLOW RATE: 359,061 Dscfm

PARTICULATE CATCH

Total Sample Train 1:	2,00	mg
Total Sample Train 2:	2,00	mg
Total Sample Train 1 1st hour:	1,40	mg

DEVIATION: 0,26%

*		*	*	*	*	*1	*2	*3	*4	*5	*6	*7	*8	Mass flow 1	DGM 1	DGM 1	Filter 1	Mass flow 2	DGM 2	DGM 2	Filter 2
Elapsed		Weight				Flue	Room	Tunnel	Unit	Unit	Unit	Unit	Unit	Reading	Inlet T	Outlet T	Temp	Reading	Inlet T	Outlet T	Temp
Time	Raw data row	Remaining	CO	CO_2	O_2	Gas	Temp	Dry Bulb	Top	Back	R.Side	L.Side	Bottom								
min		lbs	%	%	%	°F	°F	°F	°F	°F	°F	°F	°F	cuft/min	oF	oF	oF	cuft/min	oF	oF	oF
0,00	159,00	16,4	0,1	1,3	0,0	561,0	74,2	189,9	600,4	390,1	586,0	580,5	126,1	0,17	74,77	74,40	84,00	0,17	75,10	74,90	85,92
1,0	160,0	15,9	0,2	4,2	0,0	589,2	73,8	129,1	581,9	393,5	560,9	555,8	107,7	0,17	75,10	74,50	83,36	0,17	75,20	75,04	87,32
2,0	161,0	15,7	0,3	6,6	0,0	601,3	73,5	123,1	572,1	399,3	541,4	531,8	102,6	0,17	75,30	74,55	82,68	0,17	75,33	75,09	86,92
3,0	162,0	15,5	0,3	7,5	0,0	642,5	73,5	124,1	568,7	403,6	526,6	514,1	102,5	0,17	75,48	74,60	82,11	0,17	75,53	75,15	86,47
4,0	163,0	15,2	0,3	10,8	0,0	702,1	73,5	127,8	592,3	406,9	512,8	497,3	101,0	0,17	75,65	74,71	81,66	0,17	75,73	75,22	86,03
5,0	164,0	14,9	0,5	12,2	0,0	724,7	74,0	129,6	603,7	409,1	499,6	485,3	100,3	0,17	75,78	74,81	81,23	0,17	75,99	75,34	85,63
6,0	165,0	14,6	0,5	12,7	0,0	747,4	73,7	132,1	617,3	411,0	490,0	477,0	100,8	0,17	75,97	74,95	81,68	0,17	76,32	75,46	85,28
7,0	166,0	14,3	0,7	13,9	0,0	762,5	73,6	134,4	631,0	412,7	486,9	473,4	101,0	0,17	76,11	75,09	85,30	0,17	76,55	75,61	84,95
8,0	167,0	14,0	0,8	14,4	0,0	751,0	74,1	134,3	639,0	412,2	488,7	476,6	100,9	0,17	76,39	75,25	86,94	0,17	76,93	75,78	84,69
9,0	168,0	13,6	0,6	13,8	0,0	761,0	74,2	135,4	647,5	413,6	498,1	480,5	102,0	0,17	76,78	75,46	86,60	0,17	77,33	75,98	84,48
10,0	169,0	13,3	0,7	13,9	0,0	757,0	73,9	135,1	653,5	414,0	504,9	481,2	101,6	0,17	77,06	75,63	85,80	0,17	77,70	76,21	84,29
11,0	170,0	13,0	0,6	13,5	0,0	751,1	74,3	134,6	656,5	414,2	511,6	479,3	101,1	0,17	77,27	75,86	85,01	0,17	78,07	76,47	84,16
12,0	171,0	12,7	0,5	13,2	0,0	742,4	73,9	133,6	658,4	414,7	516,6	478,5	101,1	0,17	77,44	76,05	84,31	0,17	78,39	76,71	84,07
13,0	172,0	12,5	0,4	12,8	0,0	734,4	74,0	132,9	659,1	414,9	521,2	478,6	101,7	0,17	77,73	76,24	83,73	0,17	78,70	76,98	83,97
14,0	173,0	12,2	0,4	12,8	0,0	732,2	73,7	132,5	659,6	416,3	526,7	478,4	101,9	0,17	77,96	76,39	83,19	0,17	78,98	77,22	83,90
15,0	174,0	11,9	0,4	12,8	0,0	731,0	73,9	132,2	659,4	417,1	533,8	481,8	102,4	0,17	78,03	76,59	82,70	0,17	79,21	77,47	83,81
16,0	175,0	11,7	0,4	13,0	0,0	732,2	74,0	132,2	660,9	417,5	545,6	485,0	101,4	0,17	78,05	76,74	82,32	0,17	79,44	77,75	83,78
17,0	176,0	11,3	0,3	13,2	0,0	736,0	74,1	132,6	659,0	417,4	557,8	499,4	101,3	0,17	77,99	76,91	81,99	0,17	79,65	78,05	83,78
18,0	177,0	11,1	0,5	13,6	0,0	736,8	74,5	132,0	658,3	418,0	568,6	515,6	102,1	0,17	78,15	77,07	81,73	0,17	79,90	78,34	83,73
19,0	178,0	10,8	0,4	13,5	0,0	735,4	74,3	132,1	658,3	420,2	578,7	527,5	102,2	0,17	78,36	77,25	81,48	0,17	80,17	78,59	83,75
20,0	179,0	10,5	0,4	13,4	0,0	734,0	74,2	131,6	656,8	420,1	588,7	536,6	102,2	0,17	78,46	77,38	81,24	0,17	80,38	78,88	83,75
21,0	180,0	10,2	0,4	13,5	0,0	734,7	74,7	131,8	658,0	420,7	598,7	540,9	102,2	0,17	78,61	77,56	81,14	0,17	80,65	79,20	83,74
22,0	181,0	10,0	0,4	13,8	0,0	736,0	74,3	131,5	659,9	423,3	615,9	544,4	102,5	0,17	78,79	77,72	84,20	0,17	80,89	79,50	83,76
23,0	182,0	9,7	0,4	13,7	0,0	733,4	74,2	131,3	662,6	425,0	625,7	544,5	102,8	0,17	78,94	77,86	86,90	0,17	81,12	79,76	83,74
24,0	183,0	9,5	0,5	13,7	0,0	737,9	74,1	131,6	667,3	426,5	629,5	544,7	102,4	0,17	79,07	78,01	86,94	0,17	81,31	80,03	83,76
25,0	184,0	9,2	0,5	13,8	0,0	743,0	74,4	131,5	672,1	427,4	634,5	545,8	101,9	0,17	79,12	78,18	86,31	0,17	81,50	80,29	83,82
26,0	185,0	8,9	0,5	14,0	0,0	743,7	74,2	131,2	678,2	429,7	641,1	546,6	103,1	0,17	79,29	78,30	85,56	0,17	81,69	80,57	83,83
27,0	186,0	8,7	0,5	14,1	0,0	744,6	74,2	131,2	683,5	431,5	646,2	549,4	102,9	0,17	79,63	78,48	84,88	0,17	81,96	80,80	83,87
28,0	187,0	8,4	0,5	14,2	0,0	745,0	74,6	131,4	687,8	433,7	650,6	552,8	102,9	0,17	79,63	78,63	84,28	0,17	82,14	81,10	83,87
29,0	188,0	8,2	0,5	14,2	0,0	745,3	74,5	131,2	692,3	435,1	655,6	559,9	102,3	0,17	79,72	78,77	83,74	0,17	82,28	81,39	83,92
30,0	189,0	7,9	0,6	14,4	0,0	743,6	75,1	134,6	695,8	435,9	665,2	568,5	102,4	0,17	79,29	78,79	83,31	0,17	82,21	81,66	83,95
31,0	190,0	7,7	0,6	14,2	0,0	737,1	75,0	133,1	698,7	438,4	673,1	578,7	102,5	0,17	79,04	78,91	82,96	0,17	82,30	81,95	84,07
32,0	191,0	7,4	0,5	14,0	0,0	730,6	75,3	132,0	702,7	441,2	682,1	588,8	103,7	0,17	78,74	78,96	82,66	0,17	82,28	82,25	84,21
33,0	192,0	7,2	0,5	13,9	0,0	725,4	75,5	133,7	704,5	444,1	690,5	595,8	104,6	0,17	78,42	78,92	82,48	0,17	82,21	82,56	84,27
34,0	193,0	7,0	0,5	13,9	0,0	722,7	75,5	133,1	705,7	446,5	697,9	604,6	103,6	0,17	78,23	78,92	82,26	0,17	82,22	82,83	84,35
35,0	194,0	6,8	0,4	13,8	0,0	719,6	75,4	130,9	707,5	449,7	704,3	611,5	103,8	0,17	78,20	78,98	82,11	0,17	82,34	83,12	84,40
36,0	195,0	6,6	0,4	13,7	0,0	714,9	75,4	131,0	709,4	453,6	708,8	619,6	105,4	0,17	78,18	78,94	81,93	0,17	82,25	83,29	84,48
37,0	196,0	6,4	0,3	13,5	0,0	708,0	75,5	130,5	706,3	456,5	714,3	626,3	104,9	0,17	78,18	78,94	81,87	0,17	82,27	83,46	84,59
38,0	197,0	6,2	0,2	13,1	0,0	699,5	75,7	129,2	701,9	459,7	722,2	633,0	105,2	0,17	78,21	78,96	81,76	0,17	82,37	83,70	84,64
39,0	198,0	6,0	0,1	12,6	0,0	690,3	74,9	129,0	698,7	463,6	728,8	640,0	104,9	0,17	78,23	79,02	81,67	0,17	82,48	83,92	84,75
40,0	199,0	5,8	0,1	12,4	0,0	683,9	75,5	128,2	693,8	466,7	733,3	645,0	105,6	0,17	78,31	79,05	81,62	0,17	82,51	84,04	84,82
41,0	200,0	5,7	0,1	12,1	0,0	676,5	75,3	127,6	689,7	470,1	735,6	650,5	106,3	0,17	78,35	79,07	81,57	0,17	82,54	84,18	84,87
42,0	201,0	5,5	0,1	11,7	0,0	669,9	75,4	125,7	683,7	474,0	736,9	658,7	104,6	0,17	78,59	79,27	81,50	0,17	82,84	84,39	84,91
43,0	202,0	5,4	0,1	11,4	0,0	662,3	75,7	125,3	679,1	475,8	739,6	663,7	104,8	0,17	78,70	79,38	81,98	0,17	82,96	84,59	84,95
44,0	203,0	5,2	0,1	10,9	0,0	652,9	75,9	123,4	671,7	479,3	739,4	670,8	104,9	0,17	78,87	79,53	85,88	0,17	83,13	84,78	84,91
45,0	204,0	5,1	0,1	10,4	0,0	644,2	75,8	123,9	663,5	481,7	740,3	678,4	106,4	0,17	78,82	79,54	87,67	0,17	83,05	84,95	84,93
46,0	205,0	5,0	0,1	10,1	0,0	637,0	75,6	123,5	655,0	483,3	740,2	684,1	106,6	0,17	78,80	79,62	87,48	0,17	83,16	85,10	84,97
47,0	206,0	4,9	0,1	9,8	0,0	629,4	75,2	122,1	645,3	485,4	740,1	688,9	106,3	0,17	78,81	79,65	86,85	0,17	83,17	85,25	85,01
48,0	207,0	4,8	0,1	9,5	0,0	618,3	75,8	122,8	636,1	486,5	741,0	699,5	105,7	0,17	78,98	79,73	86,20	0,17	83,40	85,39	85,03
49,0	208,0	4,7	0,2	9,0	0,0	608,0	75,7	119,9	626,2	487,0	742,3	716,1	106,4	0,17	79,00	79,76	85,62	0,17	83,37	85,57	85,07
50,0	209,0	4,6	0,3	8,8	0,0	597,3	75,6	120,0	614,4	487,2	743,5	727,2	107,1	0,17	78,95	79,78	85,11	0,17	83,36	85,68	85,09
51,0	210,0	4,5	0,4	8,6	0,0	589,5	75,6	119,6	603,8	487,7	743,5	735,1	107,6	0,17	78,88	79,73	84,64	0,17	83,27	85,76	85,08
52,0	211,0	4,4	0,4	8,4	0,0	581,3	75,3	117,8	592,8	486,3	744,8	738,1	105,4	0,17	78,85	79,72	84,23	0,17	83,20	85,83	85,06
53,0	212,0	4,3	0,5	8,1	0,0	574,9	74,7	116,8	582,6	486,2	744,2	738,6	107,5	0,17	78,90	79,67	83,84	0,17	83,08	85,77	85,02
54,0	213,0	4,2	0,6	8,0	0,0	567,9	75,3	118,0	573,3	484,8	745,0	735,9	106,5	0,17	78,94	79,76	83,52	0,17	83,25	85,85	84,99
55,0	214,0	4,1	0,6	7,8	0,0	563,7	75,2	115,4	564,3	484,4	742,9	735,5	106,2	0,17	79,15	79,95	83,23	0,17	83,53	85,99	85,00
56,0	215,0	4,0	0,7	7,7	0,0	560,3	75,5	115,7	559,0	482,3	740,0	731,4	107,7	0,17	79,22	80,10	82,95	0,17	83,62	86,15	85,01
57,0	216,0	4,0	0,7	7,6	0,0	557,4	75,1	114,9	551,4	481,0	737,2	730,3	107,3	0,17	79,27	80,23	82,69	0,17	83,72	86,31	84,99
58,0	217,0	3,9	0,7	7,5	0,0	552,9	75,4	114,2	545,4	479,2	732,3	721,9	108,7	0,17	79,49	80,31	82,46	0,17	83,86	86,45	84,96
59,0	218,0	3,8	0,7	7,4	0,0	550,5	75,4	114,0	539,2	477,4	729,2	721,4	105,4	0,17	79,48	80,33	77,78	0,17	83,86	86,57	84,87
60,0	219,0	3,7	0,8	7,3	0,0	547,2	75,5	112,7	532,9	475,0	725,9	719,9	105,6	0,17	79,70	80,49	79,71	0,17	84,10	86,69	84,87
61,0	220,0	3,6	0,8	7,2	0,0	543,5	75,4	112,7	528,3	473,1	722,2	717,6	106,7	0,17	79,89	80,65	82,12	0,17	84,26	86,79	84,79
62,0	221,0	3,6	0,8	7,2	0,0	540,5	75,0	112,3	524,4	470,9	716,9	715,3	107,3	0,17	79,92	80,77	84,16	0,17	84,37	86,89	84,72
63,0	222,0	3,5	0,8	7,1	0,0	538,8	75,3	112,7	520,3	468,8	711,7	710,6	106,5	0,17	79,81	80,80	85,49	0,17	84,33	86,95	84,65
64,0	223,0	3,4	0,8	7,1	0,0	536,1	75,3	112,9	515,1	466,6	708,4	707,0	107,1	0,17	79,81	80,85	85,57	0,17	84,37	86,99	84,57
65,0	224,0	3,3	0,8	7,0	0,0	533,4	75,4	111,5	511,3	464,7	704,9	704,6	108,3	0,17	79,72	80,82	85,40	0,17	84,29	87,02	84,51
66,0	225,0	3,3	0,8	7,0	0,0	531,5	75,1	111,4	507,2	462,2	702,5	702,7	108,3	0,17	79,49	80,74	85,25	0,17	84,10	87,04	84,46
67,0	226,0	3,2	0,8	6,9	0,0	528,9	75,0	110,8	503,2	459,4	699,6	699,4	108,1	0,17	79,45	80,75	85,10	0,17	84,11	87,07	84,39
68,0	227,0	3,1	0,9	6,9	0,0	526,3	75,3	111,0	499,6	456,9	697,0	695,8	106,8	0,17	79,73	80,85	84,93	0,17	84,27	87,11	84,29
69,0	228,0	3,0	0,9	6,8	0,0	523,9	75,3	110,4	496,2	454,8	694,7	692,5	106,6	0,17	80,10	80,96	84,75	0,17	84,44	87,16	84,17
70,0	229,0	2,9	0,9	6,8	0,0	522,4	75,2	111,9	492,8	451,9	692,3	690,1	107,9	0,17	80,17	81,05	84,61	0,17	84,51	87,20	84,08
71,0	230,0	2,9	0,9	6,8	0,0	521,5	75,4	111,0	488,3	449,4	689,2	686,2	106,5	0,17	80,31	81,13	84,49	0,17	84,59	87,22	83,98
72,0	231,0	2,8	0,9	1,4	0,0	519,9	74,8	110,4	486,1	447,6	686,8	684,1	107,0	0,17	80,42	81,22	84,33	0,17	84,73	87,28	83,91
73,0	232,0	2,7	0,9	1,4	0,0	519,5	75,3	111,6	483,8	445,4	685,1	680,9	106,9	0,17	80,30	81,25	84,21	0,17	84,68	87,33	83,81
74,0	233,0	2,6	0,9	1,4	0,0	518,7	75,0	110,8	481,0	442,9	682,6	678,8	107,8	0,17	80,06	81,22	84,09	0,17	84,56	87,37	83,70
75,0	234,0	2,5	0,9	1,4	0,0	518,9	75,0	111,0	478,7	440,8	680,1	676,4	108,5	0,17	80,13	81,25	84,02	0,17	84,53	87,44	83,66
76,0	235,0	2,5	0,9	1,4	0,0	519,4	75,1	111,2	476,3	438,0	678,0	674,4	107,4	0,17	79,88	81,24	83,97	0,17	84,46	87,54	83,59
77,0	236,0	2,4	0,8	1,4	0,0	519,7	75,2	110,4	476,3	436,5	676,7	673,1	108,9	0,17	79,63	81,21	83,84	0,17	84,30	87,59	83,54
78,0	237,0	2,3	0,8	1,4	0,0	521,4	75,0	110,8	476,1	434,3	675,5	670,6	108,9	0,17	79,49	81,19	83,74	0,17	84,20	87,62	83,48
79,0	238,0	2,2	0,8	7,0	0,0	523,6	75,0	109,9	475,9	432,0	673,6	669,9	109,1	0,17	79,39	81,14	83,67	0,17	84,11	87,66	83,41
80,0	239,0	2,1	0,5	7,2	0,0	525,7	74,7	110,5	478,5	430,5	673,4	669,5	109,8	0,17	79,42	81,17	83,55	0,17	84,14	87,71	83,34
81,0	240,0	2,1	0,5	7,3	0,0	527,9	75,2	110,9	480,8	428,5	674,8	667,2	108,3	0,17	79,46	81,20	83,55	0,17	84,18	87,77	83,34
82,0	241,0	2,0	0,4	7,5	0,0	530,6	74,9	110,4	485,5	426,3	676,7	666,6	109,7	0,17	79,37	81,18	83,49	0,17	84,11	87,76	83,28
83,0	242,0	1,8	0,3	7,7	0,0	538,2	74,9	111,2	490,4	424,1	678,1	665,1	109,8	0,17	79,32	81,14	83,45	0,17	84,06	87,81	83,24
84,0	243,0	1,8	0,3	8,0	0,0	544,2	75,1	111,4	496,4	422,3	678,3	663,2	108,6	0,17	79,38	81,21	83,39	0,17	84,13	87,84	83,20
85,0	244,0	1,7	0,2	8,0	0,0	548,0	74,9	112,1	500,9	420,9	678,1	663,1	109,5	0,17	79,44	81,22	83,30	0,17	84,18	87,85	83,13
86,0	245,0	1,6	0,2	7,6	0,0	547,3	75,0	111,6	505,4	419,1	676,5	660,8	108,6	0,17	79,44	81,24	83,26	0,17	84,15	87,87	83,09
87,0	246,0	1,6	0,3	7,3	0,0	537,9	75,0	110,6	503,9	417,4	673,5	660,1	109,3	0,17	79,51	81,27	83,22	0,17	84,23	87,91	83,05
88,0	247,0	1,5	0,5	6,3	0,0	521,4	74,8	109,6	496,5	415,7	670,6	657,4	109,1	0,17	79,55	81,34	83,16	0,17	84,29	87,98	83,01
89,0	248,0	1,5	0,6	5,5	0,0	503,4	75,1	108,8	487,7	413,7	666,5	653,1	108,3	0,17	79,75	81,40	83,10	0,17	84,41	88,05	82,98
90,0	249,0	1,4	0,8	4,8	0,0	490,1	74,9	108,1	478,7	412,7	661,7	648,2	108,8	0,17	79,87	81,46	83,04	0,17	84,48	88,10	82,94
91,0	250,0	1,4	0,9	4,7	0,0	479,9	74,9	108,0	470,2	411,2	658,1	645,0	108,9	0,17	79,90	81,48	82,98	0,17	84,54	88,09	82,89
92,0	251,0	1,3	1,0	4,6	0,0	472,7	74,9	107,4	461,7	409,3	652,9	642,5	108,5	0,17	79,91	81,51	82,93	0,17	84,55	88,11	82,84
93,0	252,0	1,3	1,0	4,6	0,0	466,2	75,0	106,0	454,9	407,6	648,0	638,3	110,4	0,17	79,72	81,52	82,88	0,17	84,48	88,15	82,80
94,0	253,0	1,3	1,0	4,5	0,0	460,5	74,8	105,3	448,4	405,6	643,3	634,1	109,0	0,17	79,68	81,56	82,81	0,17	84,46	88,20	82,71
95,0	254,0	1,2	1,0	4,4	0,0	455,1	74,8	105,0	441,8	404,4	636,9	630,6	108,3	0,17	79,75	81,60	82,74	0,17	84,50	88,24	82,67
96,0	255,0	1,2	1,1	4,4	0,0	448,9	74,7	104,9	436,1	402,6	632,8	627,5	110,5	0,17	79,74	81,58	82,68	0,17	84,40	88,28	82,60
97,0	256,0	1,2	1,1	4,4	0,0	445,4	74,7	104,0	430,1	401,0	627,4	625,2	108,9	0,17	79,72	81,57	82,65	0,17	84,40	88,27	82,55
98,0	257,0	1,2	1,1	4,4	0,0	442,0	74,6	103,8	424,6	399,5	622,3	621,7	108,3	0,17	79,72	81,56	82,55	0,17	84,38	88,31	83,36
99,0	258,0	1,1	1,1	4,5	0,0	438,9	74,8	103,6	419,2	397,6	617,6	620,0	108,5	0,17	79,87	81,59	82,53	0,17	84,48	88,30	87,69
100,0	259,0	1,1	1,1	4,6	0,0	437,1	74,5	104,8	414,2	396,1	613,4	614,7	108,6	0,17	79,90	81,62	82,47	0,17	84,53	88,35	88,15
101,0	260,0	1,0	1,1	4,6	0,0	435,4	74,7	103,3	409,7	394,7	610,2	612,4	109,5	0,17	80,00	81,68	82,44	0,17	84,63	88,40	87,82
102,0	261,0	1,0	1,1	4,6	0,0	433,4	74,5	103,6	405,0	393,0	606,1	608,8	108,9	0,17	79,89	81,67	82,36	0,17	84,56	88,41	87,47
103,0	262,0	1,0	1,1	4,6	0,0	431,5	74,7	103,4	400,3	391,3	602,3	606,0	110,0	0,17	79,70	81,62	82,27	0,17	84,48	88,45	87,11
104,0	263,0	0,9	1,1	4,7	0,0	430,0	74,9	102,7	397,3	390,1	598,0	602,6	110,3	0,17	79,54	81,57	82,21	0,17	84,31	88,48	86,79
105,0	264,0	0,9	1,1	4,6	0,0	427,9	74,8	103,1	393,6	388,8	595,2	598,8	110,3	0,17	79,31	81,47	82,16	0,17	84,11	88,46	86,44
106,0	265,0	0,9	1,1	4,6	0,0	426,5	74,4	103,2	389,9	387,3	591,9	596,3	109,1	0,17	79,39	81,46	82,08	0,17	84,17	88,46	86,12
107,0	266,0	0,8	1,2	4,6	0,0	425,0	74,6	103,7	386,5	385,7	589,0	593,3	109,2	0,17	79,44	81,44	82,02	0,17	84,18	88,44	85,82
108,0	267,0	0,8	1,2	4,6	0,0	423,2	74,4	103,3	382,8	383,9	585,3	589,0	107,6	0,17	79,64	81,45	81,97	0,17	84,27	88,42	85,52
109,0	268,0	0,7	1,2	4,6	0,0	423,1	74,4	101,7	380,3	382,9	582,2	587,2	109,6	0,17	79,99	81,54	81,89	0,17	84,43	88,46	85,20
110,0	269,0	0,7	1,2	4,7	0,0	422,4	74,5	101,7	377,1	381,2	580,3	584,0	110,0	0,17	79,79	81,55	82,49	0,17	84,31	88,46	84,94
111,0	270,0	0,7	1,1	4,7	0,0	420,9	74,6	101,9	375,2	380,3	578,9	581,4	110,6	0,17	79,55	81,49	84,08	0,17	84,13	88,45	84,69
112,0	271,0	0,6	1,2	4,7	0,0	420,8	74,4	100,9	372,5	378,6	576,2	580,0	109,7	0,17	79,29	81,45	85,52	0,17	84,00	88,47	84,45
113,0	272,0	0,6	1,2	4,7	0,0	421,0	74,4	101,4	371,0	376,9	575,8	576,3	109,1	0,17	79,21	81,44	85,91	0,17	83,99	88,46	84,21
114,0	273,0	0,6	1,2	4,8	0,0	419,7	74,8	101,8	368,7	376,0	574,6	574,5	109,1	0,17	79,34	81,44	85,72	0,17	83,98	88,44	84,00
115,0	274,0	0,5	1,1	4,8	0,0	419,6	74,7	101,8	367,3	375,1	573,2	573,3	109,9	0,17	79,22	81,35	85,51	0,17	83,80	88,42	83,81
116,0	275,0	0,5	1,2	4,8	0,0	419,1	74,6	101,2	366,2	374,0	571,3	570,2	112,6	0,17	79,26	81,30	85,28	0,17	83,81	88,45	83,64
117,0	276,0	0,4	1,2	4,8	0,0	419,4	74,5	101,5	364,4	372,6	570,1	568,6	110,5	0,17	79,35	81,30	85,06	0,17	83,82	88,42	83,47
118,0	277,0	0,4	1,2	4,8	0,0	419,9	74,6	101,6	363,6	371,0	569,1	566,6	109,4	0,17	79,37	81,34	84,88	0,17	83,88	88,45	83,32
119,0	278,0	0,4	1,1	4,9	0,0	420,8	74,6	101,6	362,7	370,4	567,4	565,4	109,8	0,17	79,61	81,43	84,69	0,17	84,04	88,50	83,18
120,0	279,0	0,4	1,1	4,9	0,0	420,0	74,7	101,4	361,8	369,6	566,0	566,6	109,6	0,17	79,66	81,45	84,46	0,17	84,11	88,53	83,02
121,0	280,0	0,3	1,1	4,9	0,0	419,7	74,7	100,7	361,4	367,9	564,5	564,5	110,9	0,17	79,46	81,51	84,27	0,17	84,08	88,52	82,88
122,0	281,0	0,3	1,1	4,9	0,0	419,3	74,8	101,2	361,1	366,4	562,9	563,7	110,3	0,17	79,40	81,54	84,08	0,17	84,08	88,55	82,76
123,0	282,0	0,2	1,1	4,9	0,0	417,1	74,7	101,3	362,1	365,3	561,7	561,4	108,6	0,17	79,45	81,55	83,89	0,17	84,05	88,53	82,65
124,0	283,0	0,2	1,1	4,8	0,0	416,1	74,7	100,3	361,1	364,2	559,9	560,9	108,8	0,17	79,89	81,64	83,74	0,17	84,30	88,54	83,50
125,0	284,0	0,2	1,1	4,8	0,0	415,1	74,6	100,2	361,8	363,5	558,4	559,4	110,3	0,17	79,81	81,69	83,57	0,17	84,29	88,55	87,53
126,0	285,0	0,1	1,1	4,7	0,0	413,4	74,9	101,4	362,0	362,3	556,5	557,5	110,1	0,17	79,55	81,63	83,41	0,17	84,12	88,57	87,84
127,0	286,0	0,1	1,1	4,7	0,0	412,4	74,9	100,4	361,9	361,1	554,7	556,3	110,2	0,17	79,56	81,63	83,25	0,17	84,13	88,57	87,50
128,0	287,0	0,1	1,1	4,7	0,0	412,2	74,6	100,9	361,6	360,1	552,7	555,0	111,7	0,17	79,41	81,59	83,10	0,17	84,06	88,60	87,11
129,0	288,0	0,0	1,1	4,8	0,0	411,8	74,8	100,4	361,2	358,7	551,1	553,8	109,6	0,17	79,43	81,57	82,97	0,17	84,01	88,57	86,71

Manufacturer: INVICTA
Model: GAYA

Run: 2
Project #: PI 20231
Test Duration: 129 min

	HHV	LHV
Eff	61,38%	66,34%
Comb Eff	94,98%	94,98%
HT Eff	64,62%	69,84%
Output	35 085	kJ/h
Burn Rate	2,89	kg/h
Grams CO	452	g
Input	57 161	kJ/h
MC wet	16,78	

Note: In the “Input data”, "Calc. % O_2", "Fuel Properties", and “Mass Balance” columns, [e], [d], [g], [a]. [b], [c], [h], [u], [w], [j], and [k] refer to their respective variables in Clauses 13.7.3

Ultimate CO_2
$CO_{2\text{-ult}}$ 19,64
F_0
1,061

Overall Heating Efficiency:	61,38%	
Combustion Efficiency:	94,98%	
Heat Transfer Efficiency:	64,62%	

Air Fuel Ratio (A/F)	
Dry Molecular Weight (M_d)	29,77
Dry Moles Exhaust Gas (N_r):	421,03
Air Fuel Ratio (A/F)	12,03

Heat Output:	33 282	Btu/h	35 085	kJ/h
Heat Input:	54 223	Btu/h	57 161	kJ/h
Burn Duration:	2,15	h		
Burn Rate:	6,36	lb/h	2,885	kg/h
Stack Temp:	570,3	Deg. F	299,1	Deg. C

POLYTESTS
TESTING THROUGH YOUR REALITY

Date: 2020-05-06 Manufacturer: Invicta Model: Gaya

Project #: PI 20231 Run: 2 Tech: MM Reviewer: DP

- loading 42 LBS START FINE
- At 35 LBS close DOOR
- At 12 LBS INSERT load
- At 16.00 LBS close DOOR
- At 3.3 LBS INSERT load
- close DOOR immediatly

TEST LOAD CONFIGURATION

POLYTESTS
TESTING THROUGH YOUR REALITY

PRE / POST CHECKS

Date: 2020-05-06 Manufacturer: Invicta Model: Gaya

Project #: pJ 20231 Run: 2 Tech: MM Reviewer: DP

	Equipment #	Time	12%	22%
Moisture Meter Calibration Check:	EM 191	7:00	ok	ok

	Pre-Test	Post-Test
Facility Conditions:		
Air Velocity from less than 2 feet	0 (max50 Fpm)	0 (max50 Fpm)
Smoke Capture Check (tunnel velocity)	ok	NA
Picture (4 sides)	ok	ok
Wood Heater Conditions:		
Date Wood Heater Stack Cleaned	2020-05-05	
Date Dilution Tunnel Cleaned	2020-05-05	
Induced Draft Check (max 0.005 H2O)	ok	
Traverse before ignition	ok	
Flow Rate 140 cfm ±10%		ok
Temperature System:		
Ambient (65°-90°F)	ok °F	
Wood Heater Surface (±125°F)	ok °F	
Proportional Checks:		
Thermocouple check	ok	
Pitot Clean	ok	
Pitot verification	ok	

Sampling Train ID Numbers:	Train 1st hour	Train 1	Train 2
Probe	12	13	38
Filter Front	134	128	130
Filter Back	127	129	131
Filter Thermocouple	11	11	12
Filter (<90°F)	✓	✓	✓

POLYTESTS
TESTING THROUGH YOUR REALITY

SAMPLING EQUIPMENT CHECK OUT

Date: 2020-05-06 Manufacturer: INVICTA Model: Gaya

Project #: pI 20231 Run: 2 Tech: MM Reviewer: SP

Leakage Checks Tunnel Samplers

	System 1st hour		System 1		System 2	
Unplugged Flow Rate = .25cfm	Pre-Test ASTM (-15) CSA B415 (-5)	Post-Test (max test)	Pre-Test ASTM (-15) CSA B415 (-5)	Post-Test (Max test)	Pre-Test ASTM (-15) CSA B415 (-5)	Post-Test (Max test)
Vacuum (inches Hg.)	-15	-15	-15	-15	-15	-15
Final 1minute DGM (Liter)	226971.03	227647.22	226971.12	227647.36	161842.32	162523.99
Initial 1minute DGM (Liter)	226971.02	227647.18	226971.10	227647.31	161842.18	162523.90
Change © (Liter)	0.01	0.04	0.02	0.05	0.14	0.09
Allowable leakage .04 x Sample rate or 0.28Lpm CSA B415 (0.56)						
Check OK	ok	ok	ok	ok	ok	ok

Leakage Checks Flue Gas Sampler

Plugged Probe	Pre Test	Post Test
Vacuum (inches Hg.)	-5	-5
Rotometer Reading (mml/min.)	0	0
Flow Rate (lpm)	1.5	1.5
Allowable (.02 x Sample Rate)	30	30
Check OK	ok	ok

Leakage Checks Pitot

Plugged Probe	Pre Test 3 H2o static	Pre Test 0.4-0.5 H2o velocity	Post Test 3 H2o Static	Post Test 0.4-0.5 H2o velocity
Vacuum (inches Hg.)	3	.4	3	.4
Check OK (no change after 15 sec.)	ok	ok	ok	ok

POLYTESTS
TESTING THROUGH YOUR REALITY

PRE-TEST SCALE AUDIT

Date: 2020-05-06 Manufacturer: Invicta Model: Gaya

Project #: pI 20231 Run: 2 Tech: MP Reviewer: DP

Scale Type	Audit		Measured Weight
	Equipment #	Weight	
Platform	EM-090	44 lbs, Class F	44 lbs
Wood	EM-090	44 lbs, Class F	44 lbs
Analytical	EM-128	100 mg, Class S	100 mg
Analytical	EM-129	200 g, Class S	200 g

LIMITS OF WEIGHT RANGES

ANALYTICAL SCALE: ..... 50%-150% of dry filter weight, ± 0.1 mg
PLATFORM SCALE.....20%-80% of ideal test load weight, ± 0.1 lbs or 1%
WOOD SCALE .....20%-80% of ideal test load weight, ± 0.01 lbs or 1%

POLYTESTS
TESTING THROUGH YOUR REALITY

CONTINUOUS ANALYZERS

Date: 2020-05-06 Manufacturer: INVICA Model: Gaya
Project #: PI 2-231 Run: 2 Tech: MM Reviewer: RP

FOR TUNNELS < 12 in

Barometric pressure (P_{bar}) 100.8 (KPa.) Static pressure (P_q) 0.18 (inches w.c.)
Inside diameter: Port A _____ Port B _____.
Tunnel cross sectional area: .1963Ft^2
Pitot tube type: Standard

Traverse Point	Position (inches)			Velocity Head Δ_p (inches H_2O)	Tunnel Temperature (°F)
	6 po	7 po	8 po		
A- Centroid	3.00	3.50	4	0.079	68.30
B - Centroid	3.00	3.50	4	0.080	70.98
A-1	0.40	0.50	0.50	0.065	69.00
A-2	1.50	1.75	2	0.078	69.50
A-3	4.50	5.25	6	0.079	69.99
A-4	5.60	6.5	7.5	0.066	69.98
B-1	0.40	0.50	0.50	0.066	71.01
B-2	1.50	1.75	2	0.078	71.18
B-3	4.50	5.25	6	0.083	71.18
B-4	5.60	6.5	7.5	0.067	71.26
				AVERAGE	

$$v_s = K_p C_p (\sqrt{\Delta p})_{avg} \sqrt{\frac{(T_s)_{avg}}{P_s M_s}}$$

Where,
C_p = pitot tube coefficient, dimension less = 0.99 for standard pitot.
Δ_p = manometer reading (inches H_2O)
T_s = average absolute dilution tunnel temperature (°F + 460)
P_s = absolute dilution tunnel gas pressure or $P_{bar} + P_{qg}$
P_q = static pressure $\frac{\text{in. } H_2O}{\{13.6\}}$
M_s = 28.56, wet molecular weight of stack gas (alternatively, it may be measured)
K_p = 85.49 pitot tube constant, (conversion factor for English units)

_$\Delta_p$avg. = average of the square roots of the velocity heads (Δ_p) measured at each traverse point.

POLYTESTS
TESTING THROUGH YOUR REALITY

CONTINUOUS ANALYZERS

Date: 2020-05-06 Manufacturer: INVICTA Model: ~~Invicta~~ Mini Gaya

Project #: PT 20231 Run: 2 Tech: MM Reviewer: SD

Pre-Test (Adjust and Record)

	ZERO		SPAN		CAL. (Record Only)	
CO	0	0	2.980	3.000	1.009	1.000
Tolerance CO	0	+/- 0.02	0.020	+/- 0.15	0.009	+/- 0.05
CO_2	0	0	18.03	18.00	9.80	10.00
Tolerance CO2	0	+/- 0.02	0.03	+/- 0.5	0.20	+/- 0.5
O_2 informative CSA B415 calculated value	na	na	na	na	na	na
	Actual	Should Be	Actual	Should Be	Actual	Should Be

Post Test (Record Only)

	Zero	Span	Cal.	Zero Drift	Limit	Span Drift	Limit	Cal. Drift	Limit	OK?	Not OK*
CO	0	2.986	1.002	0	0.02	0.006	0.15	0.007	0.05	✓	
CO_2	0	18.00	9.86	0	0.02	0.03	0.5	0.06	0.5	✓	

POLYTESTS
TESTING THROUGH YOUR REALITY

TEST DATA LOG

Date: 2020-05-06 Manufacturer: Invita Model: Gaya
Project #: pJ 20231 Run: 2 Tech: MP Reviewer: DP

RAW DRY GAS METER READINGS

	System 1	System 2	Blanck
Final (Liter)	227646,20	162522,69	200,51
Initial (Liter)	226973,35	161844,25	181,59

AMBIENT CONDITIONS

	Before	After
Barometer (kPa):	100,8	100,7
Dry Bulb (F):	79,1	79,2
Humidity (%):	20,8	21,1

Flow Meter

	Start	End
Flow meter reading	N.A	N.A

Flow Meter Verification

	Before	After
Flow meter Check (liters)	NA	NA
Scale Weight (Kg)	N.A	NA

POLYTESTS
TESTING THROUGH YOUR REALITY

FUEL DATA

Date: 2020-05-06 Manufacturer: INVICTA Model: Gaya

Project #: PJ 20231 Run: 2 Tech: MM Reviewer: KP

FUEL DESCRIPTION:

Type of wood:

PRE-TEST LOAD

Piece Size	Weight	Meter Moisture Content (% dry)*				
2 x 4 x 6,5 in.	0 916 lbs.	21,3		21,3		21,3
2 x 4 x 6,5 in.	0 910 lbs.	21,6		21,4		21,3
2 x 4 x 9 in.	1 230 lbs.	21,9		22,0		21,8
2 x 4 x 9 in.	1 220 lbs.	21 7		20 9		21,0
2 x 4 x 9 in.	1 316 lbs.	20 8		20,6		20,7
2 x 4 x 9 in.	1 244 lbs.	20 7		20 8		20 9
2 x 4 x 9 in.	1 232 lbs.	20 5		20 8		20 8
2 x 4 x 9 in.	1 230 lbs.	19,0		19,4		19,8
2 x 4 x 18,5 in.	2 704 lbs.	20 1		20 8		20 7
2 x 4 x 18,5 in.	2 748 lbs.	19,9		19,7		19,8
2 x 4 x 18,5 in.	2 582 lbs.	20,0		20,0		20,1
x x in.	lbs.					
x x in.	lbs.					
x x in.	lbs.					
x x in.	lbs.					
x x in.	lbs.					
x x in.	lbs.					
x x in.	lbs.					
x x in.	lbs.					
x x in.	lbs.					
x x in.	lbs.					
x x in.	lbs.					
x x in.	lbs.					

TEST LOAD WEIGHT: 17 33 lbs

POLYTESTS
TESTING THROUGH YOUR REALITY

FUEL DATA

Date: 2020-05-06 Manufacturer: Invicta Model: Gaya

Project #: PT 20231 Run: 2 Tech: MM Reviewer: TP

FUEL DESCRIPTION:

Type of wood :

TEST LOAD

Piece Size	Weight	Meter Moisture Content (% dry)*				
1 1/2 x 3 1/2 x 25 in.	2 576 lbs.	191	196	194	194	193
1 1/2 x 3 1/2 x 30 in.	3 286 lbs.	196	194	193	193	194
3 1/2 x 3 1/2 x 30 in.	9 168 lbs.	204	206	208	210	209
1 1/2 x 3/4 x 5 in.	0 096 lbs.			196		
1 1/2 x 3/4 x 5 in.	0 112 lbs.			194		
1 1/2 x 3/4 x 5 in.	0 118 lbs.			196		
1 1/2 x 3/4 x 5 in.	0 104 lbs.			195		
1 1/2 x 3/4 x 5 in.	0 100 lbs.			193		
1 1/2 x 3/4 x 5 in.	0 132 lbs.			201		
1 1/2 x 3/4 x 5 in.	0 130 lbs.			201		
1 1/2 x 3/4 x 5 in.	0 116 lbs.			204		
1 1/2 x 3/4 x 5 in.	0 152 lbs.			191		
1 1/2 x 3/4 x 5 in.	0 138 lbs.			192		
1 1/2 x 3/4 x 5 in.	0 102 lbs.			194		
1 1/2 x 3/4 x 5 in.	0 104 lbs.			193		
x x in.	lbs.					
x x in.	lbs.					
x x in.	lbs.					
x x in.	lbs.					
x x in.	lbs.					
x x in.	lbs.					
x x in.	lbs.					
x x in.	lbs.					
x x in.	lbs.					
x x in.	lbs.					
x x in.	lbs.					
x x in.	lbs.					

TEST LOAD WEIGHT: 16 428 lbs Min 20%: 328 Max 25%: 411

POLYTESTS
TESTING THROUGH YOUR REALITY

DILUTION TUNNEL PARTICULATE SAMPLER DATA

Date: 2020-05-05 Manufacturer: Invicta Model: Gaya

Project #: PI 20231 Run: 2 Tech: MM Reviewer: DP

		SYSTEM 1 – 1st hour				SYSTEM 1				
Pre-test Weight Record		Probe & Housing Number	Front Filter Number	Back Filter Number	gaskets	Probe & Housing Number	Front Filter Number	Back Filter Number	gaskets	Blanck
Date	Time	12	134 ~~126~~	127	10	13	128	129	15	132
2020-05-05	17:00	94,5376	0,1269	0,1288	33,6046	95,1473	0,1273	0,1277	34,5891	0,1282
2020-05-06	9:00	94,5377	0,1270 ~~0,1280~~ mm	0,1287	33,6046	95,1474	0,1274	0,1278	34,5892	0,1283

		SYSTEM 1 – 1st hour				SYSTEM 1				
Post-test Weight Record		Probe & Housing Number	Front Filter Number	Back Filter Number	gaskets	Probe & Housing Number	Front Filter Number	Back Filter Number	gaskets	Blanck
Date	Time	12	134	127	10	13	128	129	15	132
2020-05-06	15:00	94,5394	0,1279	0,1285	33,6079	95,1487	0,1275	0,1279	34,5899	0,1286
2020-05-11	8:00	94,5380	0,1273	0,1281	33,6061	95,1477 ~~95,1478~~ mm	0,1272	0,1277	34,5899	0,1284
2020-05-12	8:00	94,5379	0,1273	0,1281	33,6061	95,1476	0,1272	0,1277	34,5899	0,1284

POLYTESTS
TESTING THROUGH YOUR REALITY

DILUTION TUNNEL PARTICULATE SAMPLER DATA

Date: 2020-05-05
Project #: pT 20231 Run: 2
Manufacturer: Invicta
Tech: MM Reviewer: BP
Model: Gaya

Pre-test Weight Record		SYSTEM 2			
		Probe & Housing Number	Front Filter Number	Back Filter Number	gaskets
Date	Time	38	130	131	41
2020-05-05	17:00	110,4352	0,1286	0,1277	34,1760
2020-05-06	9:00	110,4353	0,1285	0,1276	34,1759

Post-test Weight Record		SYSTEM 2			
		Probe & Housing Number	Front Filter Number	Back Filter Number	gaskets
Date	Time	38	130	131	41
2020-05-06	15:00	110,4358	0,1296	0,1274	34,1779
2020-05-11	8:00	110,4354	0,1291	0,1270	34,1778
2020-05-12	8:00	110,4354	0,1291	0,1270	34,1778

APPENDIX 2: Proportionality results

Average	Average	Average						Average
17,94	Inlet +	Inlet +						0,268
	Outlet	Outlet	Average	Average	#1	#2		
Tunnel	Temp.	Temp.	100,50	100,10	System 1	System 2		SQRT
Velocity	Meter 1	Meter 2	**Proportional Rates**		Vol.Std.	Vol.Std.		Delta-P
			PR1	**PR2**			Time	
Ft/Sec	Deg. R	Deg. R	**%**	**%**	(ft3)	(ft3)	min	(in H2O)2
17,978	528,0	529,0			0,169	0,168	0	0,2564503
18,020	528,2	528,9	101,32	101,07	0,169	0,168	1	0,2676165
17,785	528,2	528,9	101,84	101,48	0,169	0,167	2	0,2653066
17,956	528,2	528,9	101,33	101,07	0,169	0,168	3	0,2672253
17,621	528,2	529,0	103,89	103,99	0,169	0,168	4	0,2612142
17,841	528,3	529,0	103,77	103,77	0,169	0,168	5	0,263169
17,899	528,3	529,2	104,12	104,13	0,169	0,168	6	0,2634212
17,667	528,3	529,2	105,48	105,29	0,169	0,168	7	0,2598357
17,904	528,4	529,3	104,07	103,98	0,169	0,168	8	0,2635583
17,561	528,5	529,4	105,94	105,94	0,169	0,168	9	0,2584509
17,857	528,5	529,5	104,55	104,23	0,169	0,168	10	0,2625848
17,726	528,6	529,6	104,86	104,74	0,169	0,168	11	0,2608202
17,635	528,6	529,7	105,71	105,63	0,169	0,168	12	0,2592429
17,870	528,7	529,8	104,45	104,14	0,169	0,168	13	0,2625854
17,890	528,8	529,9	104,06	104,06	0,169	0,168	14	0,2631719
17,726	529,0	530,2	104,83	104,65	0,169	0,168	15	0,2608222
17,778	529,0	530,4	104,77	104,46	0,169	0,167	16	0,2614129
17,831	529,1	530,5	104,38	104,11	0,169	0,167	17	0,2623391
17,693	529,2	530,7	105,20	105,02	0,169	0,168	18	0,2602341
17,778	529,3	530,9	104,66	104,16	0,169	0,167	19	0,2616083
17,940	529,4	531,1	104,20	103,87	0,169	0,167	20	0,2635627
17,814	529,5	531,3	104,82	104,52	0,169	0,167	21	0,2615248
17,953	529,6	531,5	103,96	103,82	0,169	0,167	22	0,2635601
17,925	529,7	531,8	104,20	103,84	0,169	0,167	23	0,2631727
17,690	529,8	531,8	105,59	105,06	0,169	0,167	24	0,2599189
17,460	529,9	532,0	106,85	106,65	0,169	0,167	25	0,2564608
17,793	529,9	532,0	104,82	104,85	0,169	0,168	26	0,2612185
17,987	530,0	532,2	103,37	103,09	0,169	0,167	27	0,2645378
17,895	530,1	532,2	104,28	104,15	0,169	0,167	28	0,2628733
17,888	530,1	532,4	104,52	104,17	0,169	0,168	29	0,2625863
17,902	530,2	532,4	104,43	104,18	0,169	0,167	30	0,2625884
17,982	530,2	532,4	103,79	103,59	0,169	0,167	31	0,2639553
17,780	530,1	532,3	104,60	104,32	0,169	0,167	32	0,2614274
18,032	530,0	532,5	103,13	102,79	0,169	0,167	33	0,2653062
17,990	530,2	532,8	103,21	102,83	0,169	0,167	34	0,264926
17,991	530,3	532,9	102,98	102,52	0,169	0,167	35	0,2653141
17,946	530,3	532,8	102,90	102,64	0,169	0,167	36	0,2649272
17,949	530,4	533,0	102,61	102,02	0,169	0,167	37	0,2653339
17,883	530,5	533,1	102,58	102,24	0,169	0,167	38	0,2645407
18,022	530,5	533,1	101,74	101,48	0,169	0,167	39	0,2668579
18,289	530,6	533,0	100,21	99,91	0,169	0,167	40	0,2708406
18,142	530,6	533,0	100,85	100,34	0,169	0,167	41	0,268964
18,004	530,6	533,1	101,40	101,19	0,169	0,167	42	0,2672419
18,155	530,8	533,6	100,22	99,91	0,169	0,167	43	0,2699156
18,142	530,9	533,9	100,23	99,78	0,169	0,167	44	0,269917
17,924	531,0	534,0	101,30	100,83	0,169	0,167	45	0,2667967
18,013	531,0	534,0	100,81	100,37	0,169	0,167	46	0,2682012
17,877	531,0	533,9	100,91	100,82	0,169	0,167	47	0,2668586
18,014	531,0	534,0	100,24	99,77	0,169	0,167	48	0,2688044
18,008	531,1	534,2	99,99	99,68	0,169	0,167	49	0,268974
18,014	531,1	534,1	100,16	99,88	0,169	0,167	50	0,2689657
18,116	531,1	534,1	99,50	99,07	0,169	0,167	51	0,270488
17,920	531,0	534,0	100,66	100,28	0,169	0,167	52	0,2675645
18,070	531,0	534,0	99,81	99,33	0,169	0,167	53	0,2699173

18,101	531,0	534,0	99,48	99,09	0,169	0,167	54	0,270487
17,912	531,0	534,0	100,63	100,04	0,169	0,167	55	0,267672
18,201	531,0	534,0	98,79	98,20	0,169	0,167	56	0,2721773
17,925	531,0	533,9	100,31	99,85	0,169	0,167	57	0,268203
17,924	531,0	534,0	100,24	99,66	0,169	0,167	58	0,2682851
18,094	531,0	534,0	99,12	98,62	0,169	0,167	59	0,2708671
17,784	531,0	534,1	100,44	100,14	0,169	0,167	60	0,2668593
17,971	531,1	534,1	99,54	99,06	0,169	0,167	61	0,269543
17,952	531,2	534,3	99,29	98,94	0,169	0,167	62	0,2694948
18,179	531,2	534,2	98,32	97,64	0,169	0,167	63	0,2727558
18,141	531,1	534,2	98,43	98,03	0,169	0,167	64	0,2721901
18,010	531,1	534,2	98,96	98,36	0,169	0,167	65	0,2704879
18,202	531,1	534,2	97,99	97,36	0,169	0,167	66	0,273472
17,864	531,1	534,2	99,75	99,33	0,169	0,167	67	0,2682169
18,068	531,1	534,2	98,79	98,38	0,169	0,167	68	0,2712463
18,259	531,1	534,2	97,84	97,50	0,169	0,167	69	0,2740664
17,838	531,0	534,2	100,24	99,58	0,169	0,167	70	0,2676279
18,070	531,1	534,2	98,92	98,36	0,169	0,167	71	0,2712462
18,012	531,0	534,2	99,15	98,48	0,169	0,167	72	0,2703593
17,910	531,0	534,1	99,51	99,22	0,169	0,167	73	0,2689649
17,953	531,1	534,1	99,51	98,90	0,169	0,167	74	0,2695379
18,028	531,0	534,1	98,91	98,52	0,169	0,167	75	0,270739
17,892	531,0	534,1	99,43	99,00	0,169	0,167	76	0,2689658
17,885	531,0	534,1	99,35	98,84	0,169	0,167	77	0,2689655
18,150	531,0	534,1	98,30	97,63	0,169	0,167	78	0,2727023
17,776	531,0	534,1	100,25	99,79	0,169	0,167	79	0,2671664
17,960	531,1	534,2	99,28	98,80	0,169	0,167	80	0,269917
18,084	531,1	534,3	98,41	98,07	0,169	0,167	81	0,2718112
17,847	531,1	534,4	99,90	99,36	0,169	0,167	82	0,2680797
18,043	531,1	534,4	98,77	98,11	0,169	0,167	83	0,2712477
17,964	531,1	534,4	99,23	98,82	0,169	0,167	84	0,269919
18,005	531,2	534,6	99,06	98,50	0,169	0,167	85	0,2704884
18,032	531,3	534,7	98,84	98,39	0,169	0,167	86	0,2708665
17,909	531,3	534,8	99,65	99,05	0,169	0,167	87	0,268969
18,003	531,3	534,9	98,98	98,27	0,169	0,167	88	0,2704865
17,786	531,3	534,9	99,86	99,49	0,169	0,167	89	0,2676264
17,862	531,3	534,9	99,30	98,59	0,169	0,167	90	0,2689691
17,979	531,3	534,9	98,42	98,07	0,169	0,167	91	0,270866
17,714	531,3	534,8	99,60	99,43	0,169	0,167	92	0,267242
17,943	531,3	534,8	98,32	98,08	0,169	0,167	93	0,2708435
17,811	531,3	534,9	98,93	98,55	0,169	0,167	94	0,2689643
17,921	531,3	534,8	98,24	97,79	0,169	0,167	95	0,2708319
18,026	531,2	534,7	97,37	96,94	0,169	0,167	96	0,2727546
17,955	531,2	534,6	97,61	97,21	0,169	0,167	97	0,2718121
18,026	531,1	534,4	97,15	96,64	0,169	0,167	98	0,2731299
17,992	531,1	534,4	97,17	96,71	0,169	0,167	99	0,2728181
17,967	531,1	534,3	97,63	96,87	0,169	0,167	100	0,2721896
17,857	531,0	534,3	98,27	97,66	0,169	0,167	101	0,2704899
17,947	531,0	534,3	97,50	96,97	0,169	0,167	102	0,2722005
17,920	531,0	534,2	97,54	97,24	0,169	0,167	103	0,2717701
17,738	531,0	534,3	98,44	98,26	0,169	0,167	104	0,2689671
18,005	531,1	534,5	97,10	96,76	0,169	0,167	105	0,27313
18,067	531,1	534,4	96,73	95,98	0,169	0,167	106	0,2742318
17,873	531,1	534,4	97,82	97,34	0,169	0,167	107	0,2711382
18,094	531,0	534,3	96,55	95,84	0,169	0,167	108	0,274815
17,909	531,0	534,2	97,12	96,81	0,169	0,167	109	0,2721886
17,889	531,0	534,1	97,39	97,01	0,169	0,167	110	0,2718071
17,963	531,0	534,1	96,87	96,48	0,169	0,167	111	0,2731292
18,079	530,9	534,0	96,26	95,79	0,169	0,167	112	0,2748153
17,974	530,9	534,0	96,94	96,49	0,169	0,167	113	0,2731005
17,936	530,9	534,0	96,98	96,55	0,169	0,167	114	0,2727795

17,935	530,9	534,0	97,00	96,48	0,169	0,167	115	0,2727538
17,876	531,0	534,2	97,16	96,53	0,169	0,167	116	0,2721883
18,226	531,0	534,1	95,39	94,86	0,169	0,167	117	0,2773233
17,950	531,0	534,0	96,71	96,08	0,169	0,167	118	0,2735168
17,802	530,9	533,9	97,68	97,26	0,169	0,167	119	0,2708643
17,981	530,9	533,9	96,68	96,13	0,169	0,167	120	0,2735893

Average	Average	Average						Average
19,20	Inlet +	Inlet +						0,287
	Outlet	Outlet	Average	Average	#1	#2		
Tunnel	Temp.	Temp.	98,45	98,84	System 1	System 2		SQRT
Velocity	Meter 1	Meter 2	**Proportional Rates**		Vol.Std.	Vol.Std.		Delta-P
			PR1	**PR2**			Time	
Ft/Sec	Deg. R	Deg. R	**%**	**%**	(ft3)	(ft3)	min	(in H2O)2
19,400	534,6	535,0			0,167	0,166	0	0,272755
19,294	534,8	535,1	100,68	101,86	0,167	0,166	1	0,2849148
19,340	534,9	535,2	99,39	100,51	0,167	0,166	2	0,2870667
19,153	535,0	535,3	100,38	101,64	0,167	0,166	3	0,2840347
19,188	535,2	535,5	100,95	102,13	0,167	0,166	4	0,2836492
19,193	535,3	535,7	101,35	102,41	0,167	0,166	5	0,2832887
18,721	535,5	535,9	104,33	105,33	0,167	0,166	6	0,2757603
18,973	535,6	536,1	103,25	104,46	0,167	0,166	7	0,2789184
18,604	535,8	536,4	105,03	106,30	0,167	0,166	8	0,2735173
18,862	536,1	536,7	103,95	105,10	0,167	0,166	9	0,2770593
19,072	536,3	537,0	102,60	103,76	0,167	0,166	10	0,2801966
19,231	536,6	537,3	101,72	102,70	0,167	0,165	11	0,2826627
19,094	536,7	537,6	102,29	103,35	0,167	0,165	12	0,2808912
19,295	537,0	537,8	101,04	102,34	0,167	0,166	13	0,2840145
19,202	537,2	538,1	101,41	102,49	0,167	0,166	14	0,2827463
18,900	537,3	538,3	102,97	104,01	0,167	0,165	15	0,2783546
19,169	537,4	538,6	101,44	102,56	0,167	0,165	16	0,2823322
19,290	537,4	538,8	100,79	101,99	0,166	0,165	17	0,2840153
19,146	537,6	539,1	101,54	102,57	0,166	0,165	18	0,2820195
19,047	537,8	539,4	102,06	102,91	0,166	0,165	19	0,2805605
19,040	537,9	539,6	101,96	102,91	0,166	0,165	20	0,2805573
19,042	538,1	539,9	101,93	102,81	0,166	0,165	21	0,280556
18,951	538,3	540,2	102,62	103,26	0,166	0,165	22	0,2792771
19,010	538,4	540,4	102,01	102,79	0,166	0,165	23	0,2801952
19,039	538,5	540,7	102,03	102,77	0,166	0,165	24	0,2805614
18,888	538,6	540,9	102,79	103,57	0,166	0,165	25	0,278357
18,945	538,8	541,1	102,41	103,20	0,166	0,165	26	0,2792671
19,071	539,1	541,4	101,68	102,51	0,166	0,165	27	0,2811125
18,710	539,1	541,6	103,86	104,54	0,166	0,165	28	0,2757637
18,883	539,2	541,8	102,47	103,24	0,166	0,164	29	0,278358
19,212	539,0	541,9	101,59	102,24	0,166	0,164	30	0,2823783
19,298	539,0	542,1	100,94	101,35	0,166	0,164	31	0,2840187
18,987	538,8	542,3	102,39	102,90	0,167	0,164	32	0,2796906
19,173	538,7	542,4	101,55	102,08	0,166	0,164	33	0,2820197
19,189	538,6	542,5	101,63	102,05	0,166	0,164	34	0,2823953
19,214	538,6	542,7	100,88	101,37	0,166	0,164	35	0,2832954
19,068	538,6	542,8	101,84	102,18	0,166	0,164	36	0,2811135
19,022	538,6	542,9	102,09	102,36	0,167	0,164	37	0,2805706
19,296	538,6	543,0	100,27	100,60	0,167	0,164	38	0,2849225
18,973	538,6	543,2	101,90	102,35	0,166	0,164	39	0,2802
19,281	538,7	543,3	100,24	100,36	0,166	0,164	40	0,2849245
19,185	538,7	543,4	100,51	100,69	0,166	0,164	41	0,2836608
19,325	538,9	543,6	99,34	99,85	0,166	0,164	42	0,2861833
19,062	539,0	543,8	100,75	101,16	0,166	0,164	43	0,2823919
19,201	539,2	544,0	99,69	100,08	0,166	0,164	44	0,2849255
19,245	539,2	544,0	99,41	100,00	0,166	0,164	45	0,2854569
19,323	539,2	544,1	99,09	99,35	0,166	0,164	46	0,2867201
19,264	539,2	544,2	99,22	99,36	0,166	0,164	47	0,2861852
19,117	539,4	544,4	100,01	100,44	0,166	0,164	48	0,2838207
19,244	539,4	544,5	98,95	99,03	0,166	0,164	49	0,2864208
19,182	539,4	544,5	99,20	99,25	0,166	0,164	50	0,2854686
19,225	539,3	544,5	98,86	99,23	0,166	0,164	51	0,2862082
19,086	539,3	544,5	99,34	99,76	0,166	0,164	52	0,2845673
19,177	539,3	544,4	98,67	98,93	0,166	0,164	53	0,2861876

19,196	539,3	544,6	98,93	99,07	0,166	0,164	54	0,2861664
19,153	539,6	544,8	98,55	98,57	0,166	0,164	55	0,2861816
19,219	539,7	544,9	98,28	98,56	0,166	0,164	56	0,2870833
19,407	539,8	545,0	97,19	97,47	0,166	0,164	57	0,2901069
19,469	539,9	545,2	96,78	96,90	0,166	0,164	58	0,2912061
19,331	539,9	545,2	97,41	97,61	0,166	0,164	59	0,2891772
19,025	540,1	545,4	98,58	98,69	0,166	0,163	60	0,2849282
19,288	540,3	545,5	97,39	97,56	0,166	0,163	61	0,2888675
19,223	540,3	545,6	97,59	97,74	0,166	0,164	62	0,2880066
19,336	540,3	545,6	97,13	97,04	0,166	0,163	63	0,2895788
19,480	540,3	545,7	96,50	96,63	0,166	0,163	64	0,2916971
19,210	540,3	545,7	97,30	97,65	0,166	0,164	65	0,2879926
19,373	540,1	545,6	96,66	96,78	0,166	0,163	66	0,2904715
19,362	540,1	545,6	96,64	96,80	0,166	0,163	67	0,2904612
19,342	540,3	545,7	96,55	97,05	0,166	0,164	68	0,2901084
19,277	540,5	545,8	96,80	97,23	0,166	0,164	69	0,2892909
19,214	540,6	545,9	97,60	97,60	0,166	0,163	70	0,2879717
19,115	540,7	545,9	97,85	98,03	0,166	0,163	71	0,2867216
19,123	540,8	546,0	97,62	97,75	0,166	0,163	72	0,2869789
19,399	540,8	546,0	96,60	96,76	0,166	0,163	73	0,2908147
19,303	540,6	546,0	96,84	97,20	0,166	0,164	74	0,2895762
19,200	540,7	546,0	97,41	97,85	0,166	0,164	75	0,2879732
19,203	540,6	546,0	97,45	97,62	0,166	0,164	76	0,2879739
19,437	540,4	545,9	96,09	96,39	0,166	0,163	77	0,291697
19,225	540,3	545,9	97,21	97,52	0,166	0,164	78	0,2884129
19,265	540,3	545,9	96,94	97,08	0,166	0,163	79	0,2892326
19,415	540,3	545,9	96,25	96,45	0,166	0,163	80	0,2913439
19,305	540,3	546,0	96,90	97,03	0,166	0,163	81	0,2895759
19,519	540,3	545,9	95,77	95,83	0,166	0,163	82	0,2929268
19,143	540,2	545,9	97,82	98,01	0,166	0,163	83	0,2870831
19,289	540,3	546,0	97,01	97,28	0,166	0,164	84	0,2892201
19,384	540,3	546,0	96,63	96,95	0,166	0,164	85	0,2904612
19,268	540,3	546,0	97,17	97,48	0,166	0,164	86	0,288866
19,109	540,4	546,1	97,97	98,06	0,166	0,164	87	0,286724
19,235	540,4	546,1	97,05	97,10	0,166	0,163	88	0,2888663
19,308	540,6	546,2	96,61	96,82	0,166	0,163	89	0,2901616
19,092	540,7	546,3	97,50	97,58	0,166	0,163	90	0,2870827
19,455	540,7	546,3	95,57	95,58	0,166	0,163	91	0,2925757
19,444	540,7	546,3	95,55	95,84	0,166	0,163	92	0,2925751
19,174	540,6	546,3	96,67	97,00	0,166	0,164	93	0,2888654
19,210	540,6	546,3	96,34	96,65	0,166	0,164	94	0,2895758
19,375	540,7	546,4	95,41	95,71	0,166	0,163	95	0,2921527
19,014	540,7	546,3	97,19	97,31	0,166	0,163	96	0,286726
19,362	540,6	546,3	95,49	95,69	0,166	0,163	97	0,2922227
19,262	540,6	546,3	95,84	96,01	0,166	0,163	98	0,2907513
19,402	540,7	546,4	95,21	95,27	0,166	0,163	99	0,2929247
19,318	540,8	546,4	95,64	96,05	0,166	0,163	100	0,2913424
19,090	540,8	546,5	96,66	96,82	0,166	0,163	101	0,2882898
19,157	540,8	546,5	96,42	96,70	0,166	0,164	102	0,289219
19,236	540,7	546,5	95,98	95,87	0,166	0,163	103	0,2904597
19,077	540,6	546,4	96,66	96,62	0,166	0,163	104	0,2882389
19,230	540,4	546,3	95,92	95,89	0,166	0,163	105	0,2904599
19,208	540,4	546,3	96,11	96,35	0,166	0,163	106	0,2901056
19,323	540,4	546,3	95,70	95,70	0,166	0,163	107	0,2916942
19,349	540,5	546,3	95,33	95,71	0,166	0,164	108	0,2922043
19,346	540,8	546,4	95,19	95,29	0,166	0,164	109	0,2925733
19,264	540,7	546,4	95,45	95,66	0,166	0,163	110	0,2913408
19,212	540,5	546,3	95,87	96,03	0,166	0,163	111	0,2904794
19,310	540,4	546,2	95,27	95,38	0,166	0,163	112	0,2922204
19,360	540,3	546,2	95,18	95,12	0,166	0,163	113	0,2928554
19,231	540,4	546,2	95,68	95,84	0,166	0,163	114	0,290812

19,184	540,3	546,1	95,98	96,02	0,166	0,163	115	0,2901062
19,280	540,3	546,1	95,46	95,53	0,166	0,163	116	0,2916938
19,227	540,3	546,1	95,73	95,73	0,166	0,163	117	0,2908115
19,320	540,4	546,2	95,19	95,41	0,166	0,163	118	0,2922105
19,287	540,5	546,3	95,36	95,71	0,166	0,164	119	0,2916939
19,254	540,6	546,3	95,65	95,78	0,166	0,164	120	0,2912559
19,217	540,5	546,3	95,72	95,85	0,166	0,164	121	0,2908626
19,280	540,5	546,3	95,45	95,73	0,166	0,164	122	0,2916941
19,199	540,5	546,3	96,01	96,07	0,166	0,164	123	0,2904589
19,323	540,8	546,4	94,99	95,34	0,166	0,164	124	0,2925721
19,344	540,7	546,4	95,00	95,22	0,166	0,164	125	0,2929225
19,156	540,6	546,3	96,04	96,05	0,166	0,163	126	0,2897652
19,150	540,6	546,4	96,01	95,90	0,166	0,163	127	0,2899454
19,357	540,5	546,3	94,89	95,14	0,166	0,163	128	0,2929224
19,115	540,5	546,3	96,13	96,39	0,166	0,164	129	0,2894039

APPENDIX 3: Calibration data

APPENDIX 4: Unit pre burn

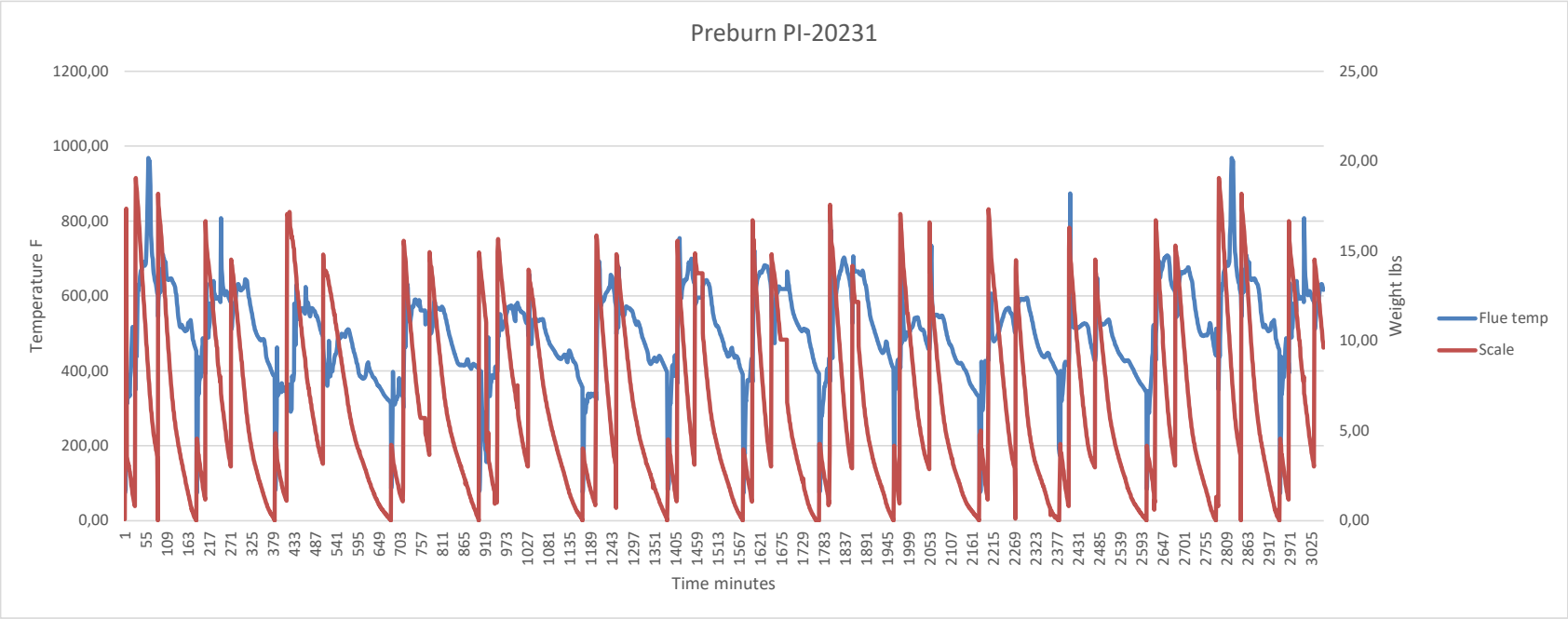
Preburn PI-20231
Temperature F
Weight lbs
Time minutes
Flue temp
Scale
1200,00
1000,00
800,00
600,00
400,00
200,00
0,00
25,00
20,00
15,00
10,00
5,00
0,00

APPENDIX 5: Participants

Danick Power ing.
v-p operation
Services Polytests inc.
450.741.3636
www.polytests.com

Maxime Martin
Technicien
Services Polytests inc.
450.741.3636
www.polytests.com

APPENDIX 6: Drawings and specifications

APPENDIX 7: Operator's manual

INVICTA FRANCE

Poêle bois de fonte
Cast iron wood stove

ANTAYA
Référence 6114-44

AKAN
Référence 6111-44

THEÏA
Référence 6113-44

ITAYA
Référence 6110-44

GAYA ARDOISE
Référence 6117-44

SYMPHONIA
Référence 6115-44

GAYA FEUILLE
Référence 6118-44

OWNER'S MANUAL

Installation and Operating Instructions

SAVE THIS OWNER'S MANUAL
FOR FUTURE REFERENCE

PLEASE READ THIS ENTIRE OWNER'S MANUAL BEFORE YOU INSTALL AND USE YOUR NEW INVICTA WOOD STOVE.

If this room heater is not properly installed, a house fire may result.
To reduce the risk of fire, follow the installation instructions.
Failure to follow these instructions can result in property damage, bodily injury, or even death.
Conforms to UL Std. 1482
Certified to ULC Std. S627

CONTACT LOCAL AUTHORITIES WITH JURISDICTION (BUILDING DEPARTMENT or FIRE OFFICIALS), ABOUT PERMITS REQUIRED, RESTRICTIONS AND INSTALLATION INSPECTION IN YOUR AREA.

We recommend that our products be installed and serviced by professionals who are certified in the U.S. by NFI (National Fireplace Institute).
www.nficertified.org

Wood Energy Technology Transfer Inc. Certified

LES PROFESSIONNELS DU CHAUFFAGE D'APPOINT

NOTES ON STOVE OPERATION AND EFFICIENCY

Rating:

You have purchased an Invicta stove tested to EPA Method 28R single burn rate stove 40 CFR Part 60 where applicable. This stove is certified to comply with the U.S. Environmental Protection Agency 2020 particulate emissions standard using crib wood. It is certified at 1.9 gr/hr. emission rate and under specific test conditions has been shown to deliver heat at rates ranging from 33,000 to 37,000 Btu (output).

This wood heater has a manufacturer-set burn rate that must not be altered. It is against federal regulations to alter this setting or otherwise operate this wood heater in a manner inconsistent with operating instructions in this manual.

Please refer to the Warranty section of this manual for registration instructions. In case of warranty claims, please contact the point of original sale or the nearest authorized Invicta dealer. Our dealer network processes all warranty claims. Authorized Invicta dealers can be located at www.invictastoves.com.

This heater is designed to burn natural wood only. Higher efficiencies and lower emissions generally result when burning air-dried seasoned hardwoods, as compared to softwoods or to green or freshly cut hardwoods. **DO NOT BURN:** *Garbage, lawn clippings, material containing rubber (including tires), materials containing plastic, waste petroleum products paints or paint thinners, asphalt products, materials containing asbestos, construction or demolition debris, railroad ties, pressure treated wood, manure or animal remains, salt water driftwood or other previously salt water saturated materials, unseasoned wood, paper products, cardboard, plywood or particleboard.* This prohibition against burning these materials does not prohibit the use of fire starters made from paper, cardboard, sawdust, wax and similar substances for the purpose of starting a fire in an affected wood heater. Burning these materials may result in a release toxic fumes or render the heater ineffective and cause smoke.

Following the maintenance guidelines set forth in this manual will help insure the efficient use of your wood heater and minimize visible emissions. Having your stove inspected by a trained professional on a regular basis will greatly increase the potential for recognizing potential impacts to efficiency.

Proper draft is important to the efficient operation of your heater. Refer to the Normal Operation section of this manual for information regarding adequate draft. Both excessive and sub-minimum draft can affect the efficiency of your wood heater. Excessive draft can lead to over-consumption of fuel, lower overall heating capacity of the stove and potential over firing. Low draft can result in inefficient burns, low heat output, expulsion of smoke into the living area when stove doors are opened and an increased potential for build-up of flammable materials in the flue.

Efficiency:

Efficiency was measured and weighted using EPA Method 28R and CSA B415-10 methodology. A weighted average was used to calculate the overall efficiency using the higher heating value (HHV). The weighted average efficiency is 62,5% (HHV).

To maximize the efficiency of your wood stove, make sure it is sized properly for the space you plan to heat. An oversized stove will often be forced to burn at a lower and dirtier burn rate. Consult with your dealer for sizing and correctly placing the stove in your home. An incorrectly placed stove can greatly reduce efficiency. Maximizing the efficiency of your stove will heat your house quickly, burn cleaner and use less wood.

Refer to the Choosing Firewood section of this manual for appropriate fuel selection. Seasoned firewood is typically at or near 20% moisture content. This can be measured with any number of hand-held moisture meters available through your local hearth shop. Follow instructions included in the meter you purchase to measure fuel wood moisture content. Burn only dry, seasoned wood as using wet wood will greatly reduce your efficiency.

CO Emissions:

This Invicta series has the following CO emission rates by burn level: 3.1gr./min.
Wet wood or unapproved fuel described above can greatly affect the emissions of a wood burning stove.

Smoke/Fire/CO Detectors:

It is highly recommended that smoke and CO detectors be installed throughout the heated space when a wood burning heater is installed. Be certain to install these devices not only in the area where the wood appliance is located, but also in bedrooms, hallways leading to other areas of the house and all common areas of the heated space. Check the batteries in these devices and assure operation by performing whatever test operations are recommended by the manufacturer.

TABLE OF CONTENTS

INTRODUCTION

Thank you for purchasing a Invicta woodstove from Energy Distribution 2015. This stove will provide years of comfortable heat. This Invicta series offer you modern technology with the unique beauty and qualities of cast iron. We trust that you will appreciate the quality of this handcrafted product.

Your Invicta series woodstove burns efficiently, and produces a large amount of heat. However, you should not consider this stove as the primary heat source for your home.
This Invicta series as one of the largest glass window on the market and allows you to enjoy the fire from a variety of locations in the room.

Please read this manual in its entirety. Its purpose is to familiarize you with your stove's safe installation, proper break-in, operation and maintenance. It contains extremely important information so keep it handy and refer to it often.

A qualified heating technician may need this owner's manual as a reference when installing this stove in your home. There are national, state, and local building codes that direct the technician on how to install your stove. These codes stipulate the dimension of stovepipe and clearances to walls, ceilings, hearth, and other combustible surfaces. The codes exist to reduce the risk of fire. Failure to follow these instructions can result in fire, property damage, bodily injury, and even death.

Install the stove in a safe, open area, away from traffic flow, doors, and hallways. If possible, try to install the stove near an existing chimney and chimney connector. It is extremely important to install this stove with the proper clearance from combustible surfaces. You can purchase specific connector pipe and special wall coverings as specified by this manual and the NFPA 211 code to protect combustible surfaces. As a general rule, keep furniture, drapes, curtains, wood, paper, and other combustibles at least 36 inches (92 cm) away from the stove. Never install the stove in or near a storage location for gasoline, kerosene, charcoal lighter fluid or any other flammable liquids.

Install the stove in your central living area to allow heat to radiate naturally to distant rooms. Do not install your stove in a poorly insulated area. This is inefficient and would likely result in higher fuel usage.

- **SAFETY NOTICE :**

  AN IMPROPERLY INSTALLED STOVE CAN RESULT IN A HOUSE FIRE. FOR YOUR SAFETY, CAREFULLY FOLLOW THE INSTALLATION DIRECTIONS. CONTACT LOCAL BUILDING OR FIRE OFFICIALS ABOUT RESTRICTIONS AND INSTALLATION INSPECTION IN YOUR AREA.

The safety of your stove will depend on many factors, some of which include: distance to combustible objects, correct venting, and adequate chimney maintenance. Should you have any questions, do not hesitate to contact your dealer for additional information.

Contact your dealer for any necessary warranty service.

This Invicta series stove is warranted by:

Energy Distribution 2015
1361 Denison ouest
St-Alphonse, Qc J0E 2A0, Canada
www.Invictastoves.com

CODES

When you install your Invicta serie woodstove, it is imperative that you adhere to all Federal and local codes. Obtain these codes from either of the following sources:

American National Standards Institute, Inc. (ANSI)
1430 Broadway New
York, NY 10018
www.ansi.org

National Fire Protection Association, Inc. (NFPA)
Battery March Park Quincy,
MA 02269 www.nfpa.org

Do not install in a mobile home.

SAFETY INFORMATION

Read and understand this Owner's Manual thoroughly before installing and using this stove.

Make sure to install your stove:

- According to the manufacturer's recommendations
- In accordance with all applicable codes
- With the proper sized chimney

When using your stove, follow these safety precautions:

- **Never** modify this stove in any way.
- **Never** burn kiln dried, painted or treated wood in this stove.
- **DO NOT BURN GARBAGE. Never** burn garbage or trash, colored or glossy paper, solvents, plywood, artificial logs, cardboard, or driftwood, in this stove.
- **Never** burn coal in this stove.
- **DO NOT BURN FLAMMABLE FLUIDS.**
- **DO NOT USE CHEMICALS OR FLUIDS TO START THE FIRE. Never** use gasoline, kerosene, charcoal lighter fluid, or other flammable fluids to start or invigorate the fire. These fuels will cause dangerous burning conditions in the stove. Keep all such materials away from the stove.
- **Never** use a wood grate or other device to elevate the fire.
- **Never** allow logs in the firebox to hit the glass when the door is closed.
- **Never** slam the door or use the door to force wood in to the stove.
- **Never** over-fire your stove.
- **Never** put articles of clothing or candles on a hot stove.
- **Never** connect the stove to a flue used by another appliance.

Other safety guidelines :

- Keep all combustible items such as furniture, drapes, clothing, and other items, at least 36" (0.92 m) from the stove
- Install a smoke detector, preferably in an area away from your wood stove.
- Keep a fire extinguisher handy. We recommend the type rated "A B C."
- Dispose of ashes properly. (See page 22)
- Keep children and pets away from the stove when it is burning; they could be seriously injured by touching a hot stove.
- Clean your chimney system as needed.
- Outside combustion air may be required if:
  1. This solid-fuel-fired appliance does not draw steadily, smoke rollout occurs, fuel burns poorly, or back-drafts occur whether or not there is combustion present.
  2. Existing fuel-fired equipment in the house, such as fireplaces or other heating appliances, smell, do not operate properly, suffer smoke roll-out when opened, or back-draft whether or not there is combustion present.
  3. Opening a window slightly on a calm (windless) day alleviates any of the above symptoms.
  4. The house is equipped with a well-sealed vapor barrier and tight fitting windows and/or has any powered devices that exhaust house air.
  5. There is excessive condensation on windows in the winter.
  6. A ventilation system is installed in the house.

If these or other indications suggest that infiltration air is inadequate, additional combustion air should be provided from the outdoors. Outside combustion air can be provided to the appliance by using an optional air dispenser.

PERIODIC CHECKLIST

Perform each of these tasks at the specified intervals.

At the End of Every Week:

- Empty ashes from the firebox, sooner if the firebox is full.

At the Beginning of Every Other Month:

- Depending upon your use of the stove, visually inspect the chimney connector and chimney for creosote.
- Check door seals using the "dollar bill test." - When the stove is cool, shut the door on a dollar bill. If the bill pulls out without any resistance, then your stove's door is not sealing properly. To tighten the seal, adjust the door latch mechanism or change the door gasket.

At the End of Every Season:

- Dismantle the chimney connector and clean it thoroughly. Replace any pieces that show signs of rust or deterioration.
- Inspect and, if necessary, clean your chimney. Clean out the inside of the stove thoroughly.
- Inspect all door gasket material and replace if worn, frayed, cracked or extremely hard.

EMERGENCY PROCEDURES

If you have a stovepipe or chimney fire, follow these instructions:

1. If the fire is too threatening, leave the area and call the fire department immediately! If not, perform the next three steps.
2. Close the stovepipe damper (if present).
3. Keep the stove front door closed!

WARNING : DO NOT ATTEMPT TO PUT OUT A STOVEPIPE OR CHIMNEY FIRE BY THROWING WATER ONTO THE STOVE, STOVEPIPE, OR CHIMNEY. THE EXTREMELY HIGH TEMPERATURE OF SUCH FIRES CAN CAUSE INSTANTANEOUS STEAM AND SERIOUS BODILY HARM.

Once the chimney fire expires, let the fire in the stove die out completely. Inspect the stove, stovepipe, and chimney thoroughly for any sign of damage before firing the stove again. You must correct any damage before using your stove again.

Establish a routine for the fuel, wood burner and firing technique. Check daily for creosote build-up until experience shows how often you need to clean to be safe. Be aware that the hotter the fire the less creosote is deposited, and weekly cleaning may be necessary in mild weather even though monthly cleaning may be enough in the coldest months. Contact your local municipal or provincial fire authority for information on how to handle a chimney fire. Have a clearly understood plan to handle a chimney fire.

SPECIFICATIONS

Maximum Heat Output:
99,000 BTUs per hour of cordwood (based on independent laboratory test results).

Floor Size of Heated Area:
Up to a maximum of 2,000 square feet. Factors unique to your home can reduce the square footage the stove will heat. Home insulation value, number and efficiency of windows, floor plan, stove placement, quality of the fuel and other conditions may limit the heating ability of the stove.

Firebox Capacity:
2.32 cubic feet.

Maximum Log Length: Up to 24” (61cm).

Emissions: 1.9 g/hr.

Burn Time: Up to 5+ hrs.
Note: The amount and weight of wood contained per cubic foot of firebox volume can vary from 10 to 25 lbs. per cubic foot depending on type of wood, moisture content, packing density and other factors.

Stove Dimensions: (see drawing for exact dimension of each model)

Connector Size: **7**" (178 mm) diameter
Metal Chimney: **7**" (178 mm) inside diameter
Masonry Chimney: 7” (178 mm) inside diameter (round flue), 8” x 8” (203 x 203 mm) (square flue)

AKAN 6111-44

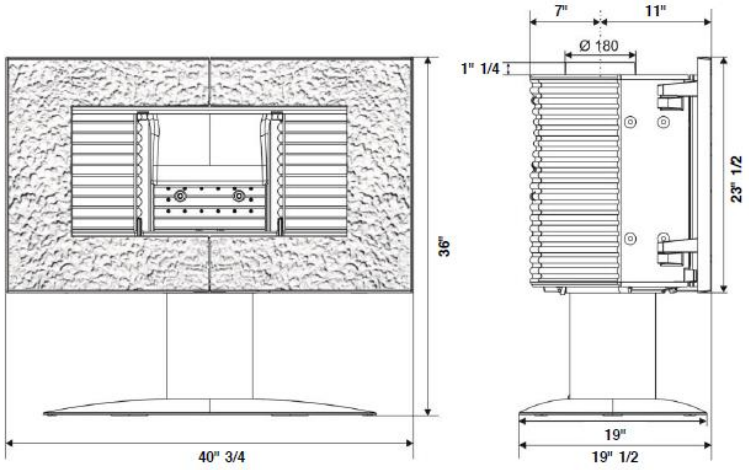

ANTAYA 6114-44

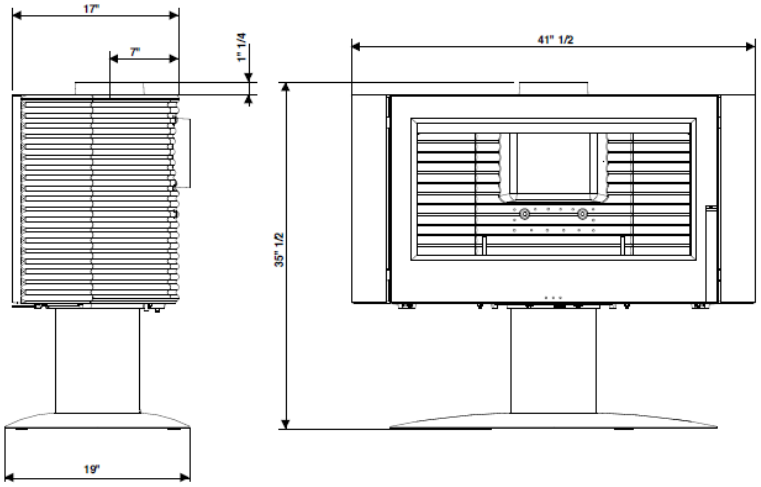

GAYA ARDOISE 6117-44

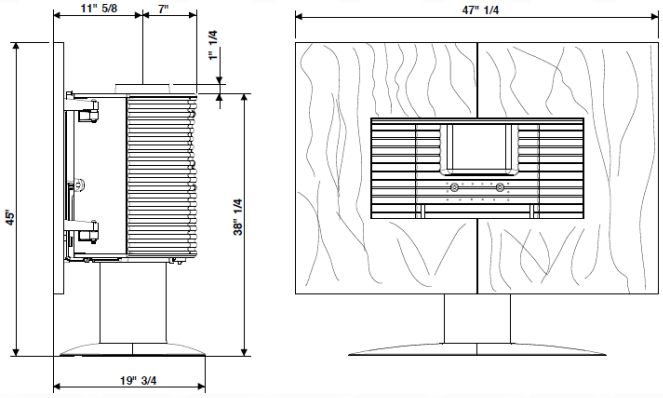

SYMPHONIA 6115-44

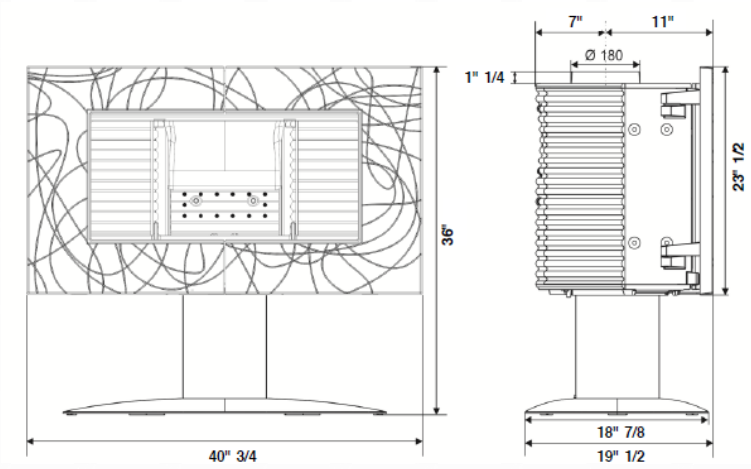

GAYA FEUILLE 6118-44

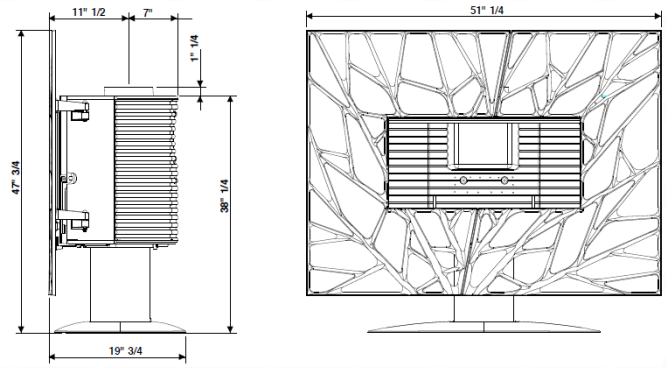

THEIA 6116-44

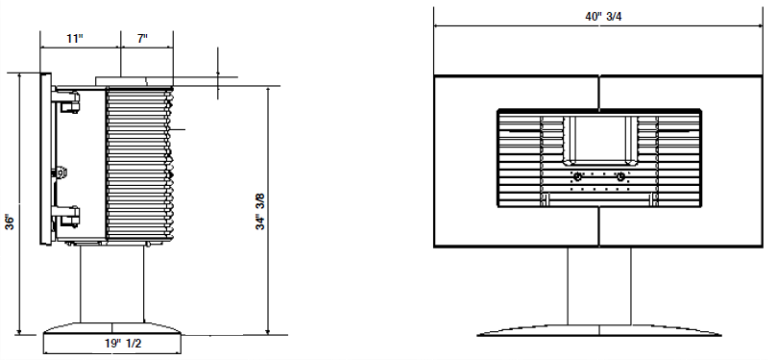

ITAYA 6110-44

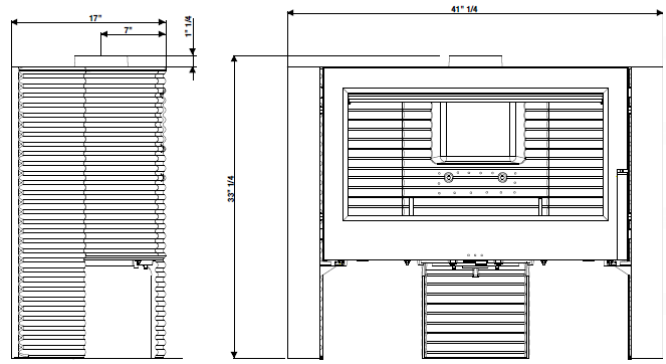

INSTALLATION

UNPACKING

Energy Distribution packages your Invicta series woodstove with the greatest care so that it ships safely. Under certain circumstances, however, damage may occur during transit and handling. When you receive the Invicta, carefully unpack and inspect the stove and all accompanying parts. Ensure that all parts are included inside the stove. If any parts are damaged or missing, please contact your authorized Invicta dealer immediately.

Be sure to remove the packaging material in the flue collar and above the baffle before installing the chimney.

PACK LIST

Invicta serie Akan, Antaya, Gaya Ardoise, Gaya Feuille, Itaya, Symphonia, Theia Woodstove
Owner's Manual

The label is attached by a cable below the ashtray inside the stove.

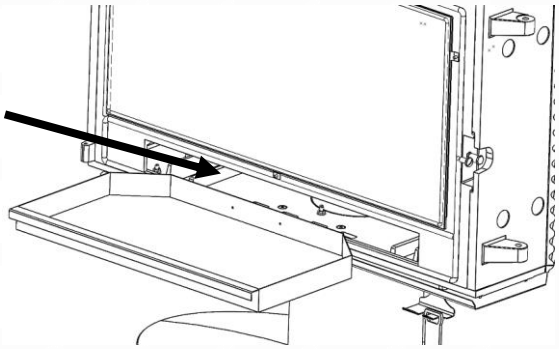

Figure 2 - Label Location

INSTALLING YOUR STOVE

Choose a place to install your Invicta woodstove. Consider the location of your stove for optimum heating efficiency. In general, it is better to place your stove in a main living area, rather than in a basement or other confined space.

Inspect this location to make sure that the stove and stovepipes will have the required clearance from combustible materials that are near the stove. Combustibles include walls, floor, ceiling, and chimney chase. You must carefully consider the clearances to all of these combustibles before actually connecting your stove.

If the floor is made of combustible material, then a non-combustible floor protector is required between the floor and the stove. An example of a non-combustible floor protector is a hearth constructed with a continuous layer of tile, brick, slate, glass or another non-combustible facing. There is no R-value requirement.

If you use a rear connector pipe, ensure it is listed with Underwriter's Laboratories. Check the listing of your pipe with UL for the correct clearances.

The diagrams in this manual represent typical installations, but are specific to the Security Chimney brand.

Clearances to NFPA Code 211 Protected Surfaces

You can reduce the clearances to combustible surfaces by using any National Fire Protection Agency (NFPA) approved wall protection system with additional approval of the regulatory authority having jurisdiction in your area. Please refer to NFPA Code 211 for specifications and complete details. You can obtain this information directly from the NFPA.

National Fire Protection Agency
Batterymarch Park
Quincy, MA 02269
1-800-344-3555
1-617-770-3000 www.nfpa.org

HEARTH REQUIREMENTS & FLOOR PROTECTION

Ensure you protect combustible flooring with a covering of non-combustible material. This Invicta series does not require an insulated hearth pad. The minimum floor protection must be met under the stove and extend beyond the stove as follows:

The minimum floor protection for US installations is 56 1/4in x 33in.
The minimum floor protection for installations in Canada is 57 1/4in x 43in

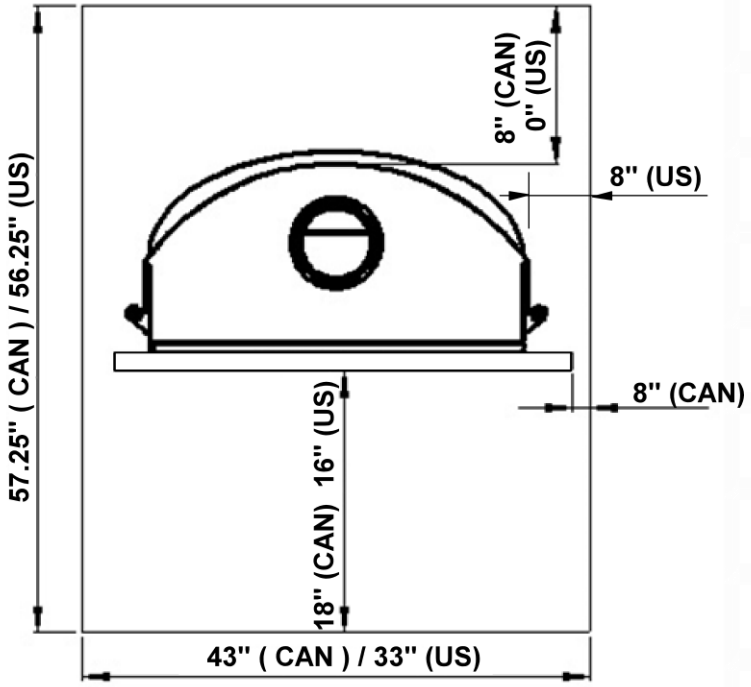

Figure 3 – Hearth Dimensions

COMBUSTIBLE SURFACE REQUIRED CLEARANCES

Note: *Dimensions shown in the following figures are from the body of the stove unless otherwise indicated.*

It is very important to follow minimum clearances for chimney connectors to combustibles such as walls and ceilings when installing the stove near combustible surfaces.

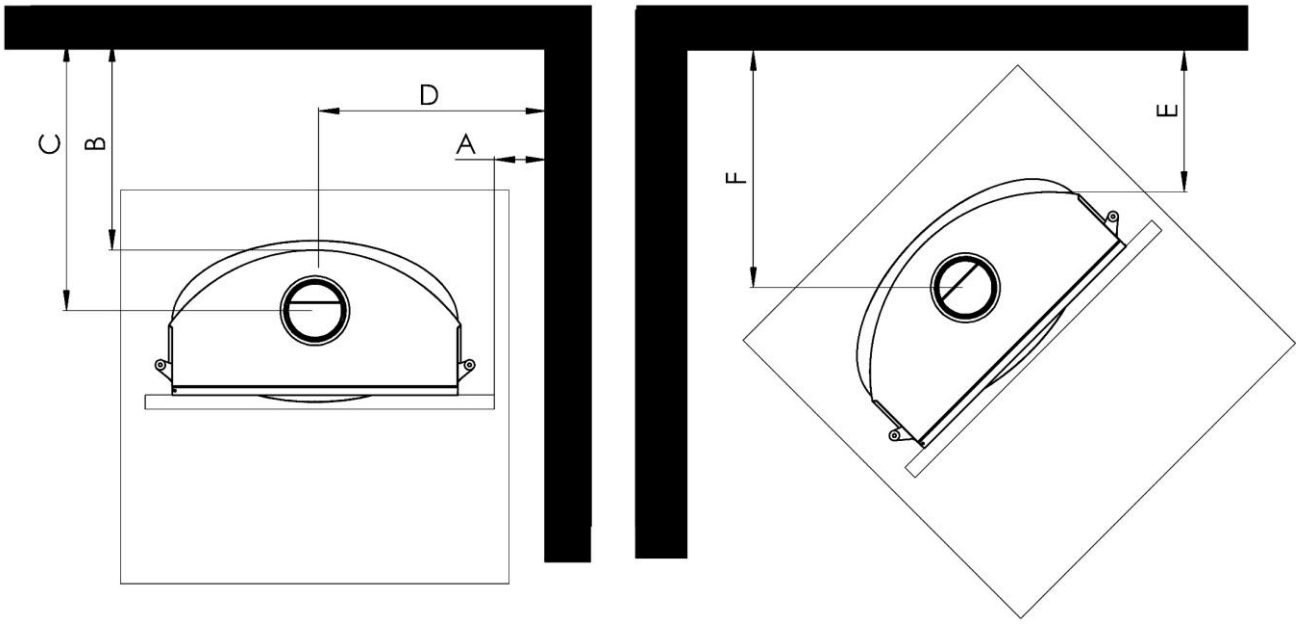

Figure 4 – Clearance to Combustibles

	Parallel				Corner	Corner
Clearances	A	B	C	D	E	F
Single wall Connector	18”-46cm	19”-48cm	26”-66cm	35”-89cm	21-53cm	31.5”-80cm
Double Wall Connector – Inc. Rear Heat Shield	18”-46cm	12”-30cm	18.5”-47cm	34.5”-87cm	21”-53cm	31.5”-80cm

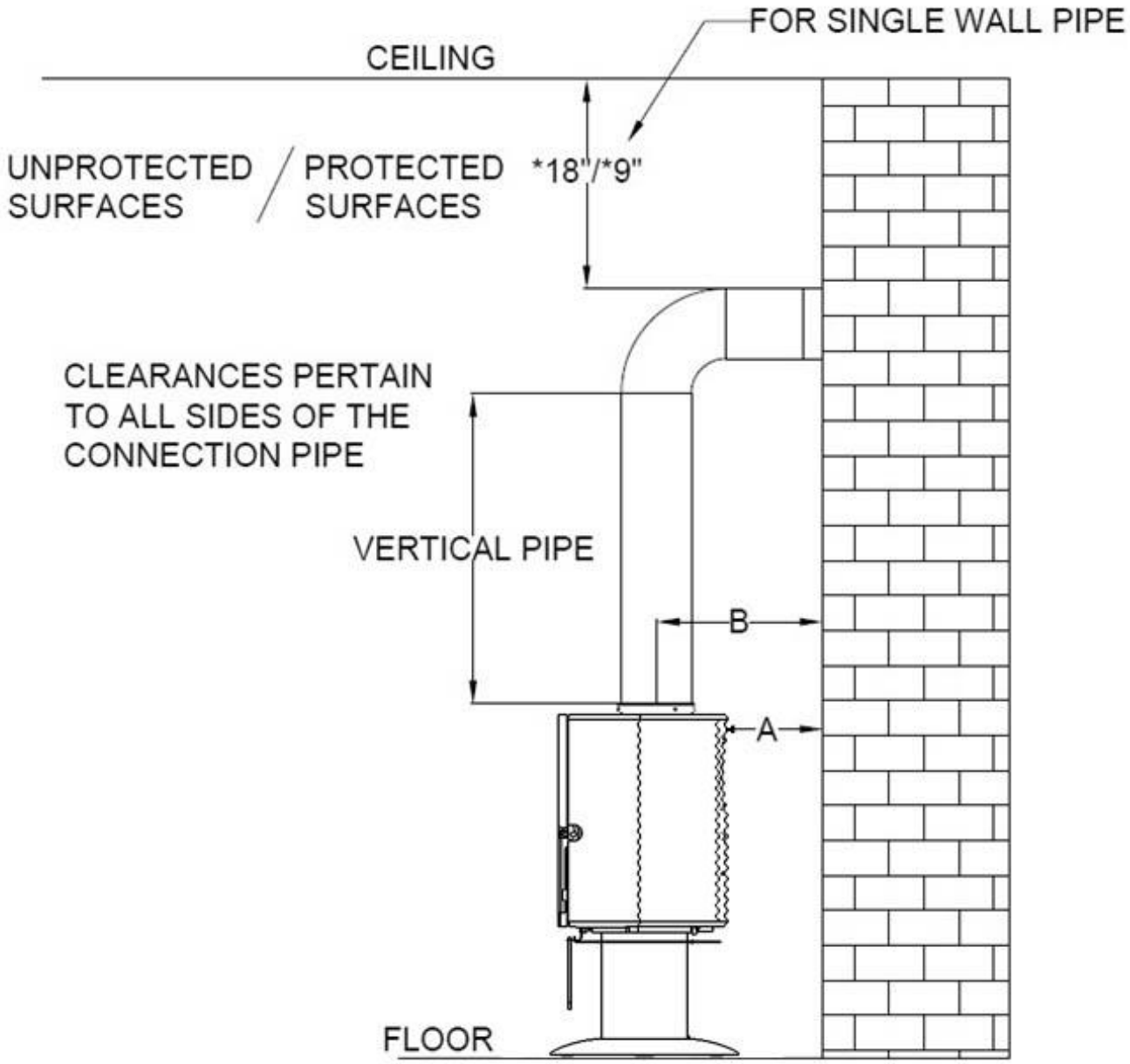

Figure 5 Chimney Connector Clearances

	Single Wall Pipe		Double Wall Pipe	
Through the wall top flue exit				**Inc. Rear Heat Shield**
A		19” (48cm)		12” (30 cm)
B		26” (66 cm)		18.5” (47cm)

***For double wall pipe clearance to ceiling, refer to pipe manufacturer specifications.**
See Parallel Clearance to Combustibles for clearances to the sides of the stove.

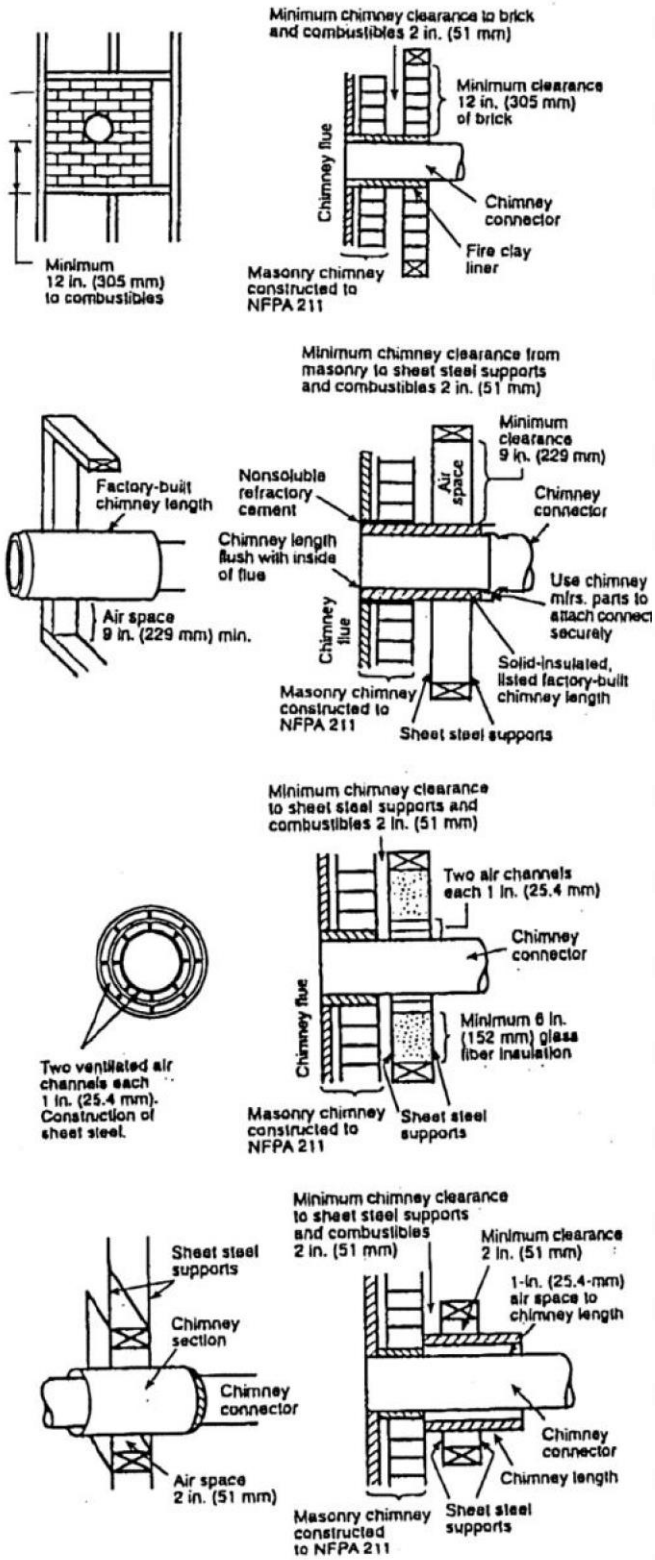

CHIMNEY CONNECTOR SYSTEMS AND CLEARANCES FROM COMBUSTIBLE WALLS

FOR RESIDENTIAL HEATING APPLIANCES

A. Minimum 3.5in thick brick masonry all framed into combustible wall with a minimum of 12in. brick separation from clay liner to combustibles. The fire clay liner shall run from outer surface of brick wall to, but not beyond, the inner surface of chimney flue liner and shall be firmly cemented in place.

B. Solid-insulated, listed factory-built chimney length of the same inside diameter as the chimney connector and having 1in. or more of insulation with a minimum 9in. air space between the outer wall of the chimney length and combustibles.

C. Sheet steel chimney connector, minimum 24 gauge in thickness, with a ventilated thimble, minimum 24 gauge in thickness, having two 1in. air channels, separated from combustibles by a minimum of 6in of glass fiber insulation. Opening shall be covered, and thimble supported with a sheet steel support, minimum 24 gauge in thickness.

D. Solid insulated, listed factory-built chimney length with an inside diameter 2in. larger than the chimney connector and having 1in. or more of insulation, serving as a pass-through for a single wall sheet steel chimney connector of minimum 24-gauge thickness, with a minimum 2in. air space between the outer wall of chimney section and combustibles. Minimum length of chimney section shall be 12in. chimney section spaced 1in. away from connector using sheet steel support plates on both ends of chimney section. Opening shall be covered, and chimney section supported on both sides with sheet steel supports securely fastened to wall surfaces of minimum 24-gauge thickness. Fasteners used to secure chimney

section shall not penetrate chimney flue liner.

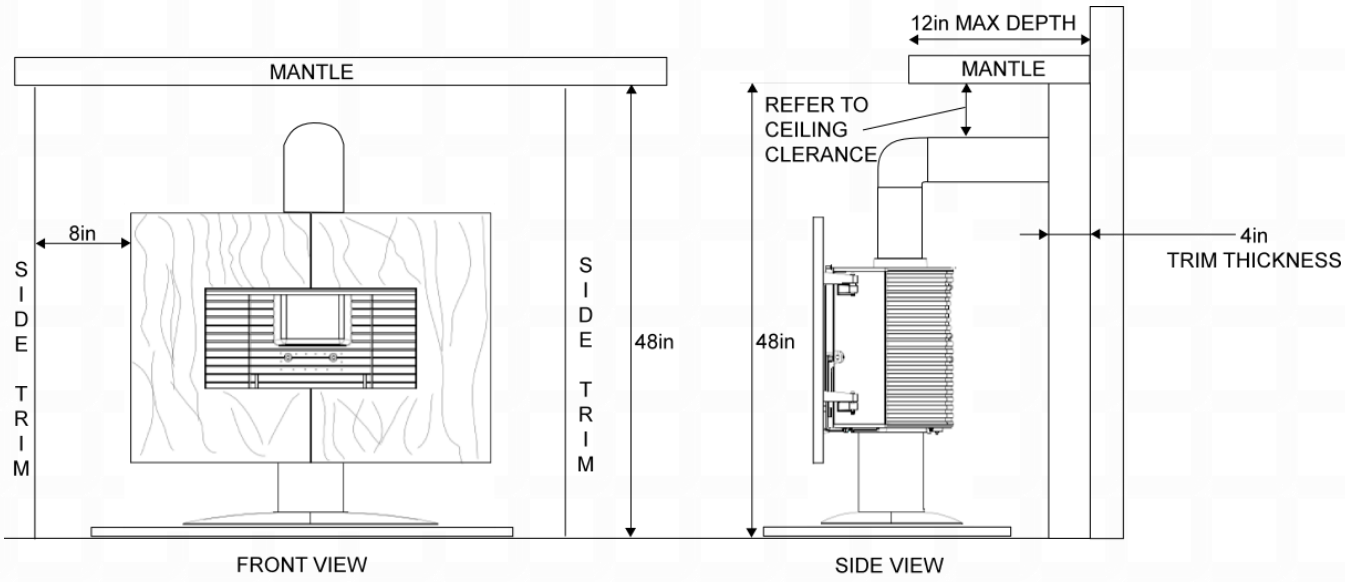

CLEARANCES APPLY WITH STOVE IN FIREPLACE ASLO

Figure 6 Trim and Mantle Clearances

OUTSIDE AIR SUPPLY

You can connect an outside air source as closed as possible to this stove using an optional air dispenser. The advantage of providing outside air directly to the stove is that the air used by the stove for combustion is taken from outside the residence rather than from within the room where the stove is located.

The outside air dispenser will allow to bring sufficient air intake to a minimum 3" (76 mm) diameter duct (supplied by others) * which leads to the outside of the house. When considering placement of the air dispenser from the outside of the house, keep in mind the need to avoid structural members of the house.

Locate the termination of the duct on the outside wall of the home in such a manner to avoid the possibility of obstruction by snow, leaves or other material. Screen the termination using ¼" x ¼" mesh rodent screen and cover it with a rain/wind proof hood (flex pipe, outside termination, mesh, and hood supplied by others) Contact your dealer for availability.

VENTING COMPONENTS & CONFIGURATION REQUIREMENTS

- **DO NOT CONNECT THIS UNIT TO A CHIMNEY FLUE USED BY ANOTHER APPLIANCE**
- Single wall connector that is at least 24 MSG or 25 MSG blued steel stovepipe.
- Double wall connector (Rear pipe) which is used with a listed, factory-built "Type HT" chimney or with a masonry chimney to reduce clearances, is available from several manufacturers, your dealer can help you choose. Some air insulated connector pipe models available are Simpson Dura Vent DVL and Metalbestos DS. Security, GSW, ICC and Ameritec also have acceptable Rear connector pipe.
- The chimney connector cannot pass through a floor or ceiling, nor any attic or roof space, closet or similar concealed space. Where venting requires passage through a wall or partition of combustible construction, the installation must conform to NFPA Code 211 or CAN/CSA - B365.

- Be sure to follow the manufacturer's instructions to maintain an effective vapor barrier at the location where the chimney of other component penetrates the exterior of the structure

- It is very important to follow minimum clearances for chimney connectors to combustibles such as walls and ceilings when installing the stove. Typical chimney connector clearances are outlined below. The single wall clearances are generic; the double wall clearances shown are specifically for Security brand and may vary with other brands. ***Check the specifications from the manufacturer of your connector.***

COMPONENTS OF A VENTING SYSTEM

The complete venting system consists of several components: chimney connector, wall thimble, wall pass-through, chimney, and liner. It is *absolutely necessary* that you install all of these components and maintain the clearances to combustibles discussed earlier to ensure a safe stove installation.

To protect against the possibility of a house fire, you *must properly install and constantly maintain the venting system in good condition. Be sure to inspect the chimney and chimney connector and keep it clean.* Upon inspection, immediately replace rusted, cracked, or broken components. Failure to follow these instructions and specified components or using make-shift compromises can result in fire, property damage, bodily injury, and even death.

- The *chimney connector* is the stovepipe from the woodstove to the chimney. The chimney connector stovepipe is 7" (178 mm) diameter, 24 MSG or 25 MSG blued steel connector pipe. *Do not use aluminum or galvanized steel pipe* - they cannot withstand the extreme temperatures of a wood fire.
- The *thimble* is a manufactured (or siteconstructed) device installed in combustible walls through which the chimney connector passes to the chimney. It keeps the walls from igniting. You must use a wall thimble when installing a chimney connector through a combustible wall to the chimney.

- A *wall pass-through* (or chimney support package) also keeps the walls from igniting. You must use one when connecting through a wall or ceiling to a prefabricated chimney.

- Only install this stove to a *lined masonry chimney* or an *approved high temperature prefabricated residential* type building heating appliance chimney. *Do not* connect this stove to a chimney serving another appliance; you will compromise the safe operation of both the wood stove and the connected appliance.

- A *liner* is the UL 1777 or ULC S635 (for factory built fireplace or masonry) chimney.

You must connect your stove to a chimney comparable to those recommended in this manual. *Do not use stovepipe as a chimney*. Use stovepipe for freestanding installations only to connect the stove to a proper chimney.

- **WARNING: DO NOT CONNECT THIS APPLIANCE TO ANY AIR DISTRIBUTION DUCT OR SYSTEM.**

INSTALLING A VENTING SYSTEM

Attach stovepipe sections to the flue collar and to each other with the crimped end toward the stove. If creosote builds up, this allows the creosote to run into the stove and not on the outside of the stovepipe or onto the stove.
Secure all joints, including attaching the stovepipe to the stove's flue collar, with three sheet metal screws. Install #10 x 1/2" (3 mm x 13 mm) sheet metal screws into the holes pre-drilled in the flue collar. Disregarding the screws can cause joints to separate from the vibrations that result from a creosote chimney fire.

You can simplify connecting stovepipe by using additional accessories such as telescoping pipes, slip-connectors or clean-out tees. These accessories ease the periodic inspection of your chimney, as well as allow you to dismantle the stovepipe easily (without moving the stove).

Install the stove as close as practical to the chimney, while maintaining all proper clearances. Install stovepipe that is as short and as straight as possible. Horizontal runs of stovepipe must always rise away from the stove at a minimum of 1/4" per foot (21mm/m).

We do not recommend long runs of stovepipe to increase heat dispersal. Longer lengths of stovepipe, or more connecting elbows, than necessary increase the chances of draft resistance and the accumulation of creosote buildup.

In general, you do not need to install a stovepipe damper with the Invicta series. Some installations, however, could benefit from a stovepipe damper, such as a tall chimney which can create a higher than normal draft. In such cases, a damper can help regulate the draft. The Invicta series requires a draft between 0.06" and 0.1" WC. For drafts above 0.1" WC, install a stovepipe damper. Check the draft at stove installation time.

Remember, the NFPA recommends minimum clearances for chimney connectors to combustibles such as walls and ceilings. Once the stove is installed at safe distances from these combustible surfaces, it is also important to maintain these connector clearances for the remainder of the installation.

CONNECTING THE STOVE TO A CHIMNEY

You can install your Invicta to a prefabricated metal chimney, or to a masonry chimney.

This room heater must be connected to (1) a listed Type HT (2100° F) chimney per UL 103 or ULC S629, or (2) a code-approved masonry chimney with a flue liner. The chimney size should not be less than the flue collar, or more than three times greater than the cross-sectional area of the flue collar.
We recommend installing a cleanout tee where possible to simplify chimney cleaning and maintenance.

Connecting to a Prefabricated Metal Chimney

There are two ways to install a prefabricated metal chimney:

- An *interior* installation where the chimney passes inside the residence through the ceiling and roof.
- An *exterior* installation where the chimney passes through the wall behind the stove then up the outside of the residence.

Whenever possible, choose an interior chimney. An interior chimney heats up quickly and retains its heat; thus promotes a better draft and discourages the formation of creosote. An exterior chimney does not benefit from the warmth of the building, so it typically operates at lower flue temperatures than an interior chimney and may experience increased creosote accumulation.

When connecting the Invicta to a prefabricated metal chimney, you must follow, precisely, the manufacturer's installation instructions. Use only Type HT (2100° F), prefabricated metal chimneys listed per UL 103 or ULC S629 standards.

Ensure the size of the prefabricated chimney's flue is appropriate for the Invicta stove. This Invicta series requires a 7" (178 mm) inside diameter flue for new installations. A 7" diameter flue provides adequate draft and performance. You can use an 8" (203 mm) diameter existing flue with a reducer. An oversized flue contributes to creosote accumulation. (In this case, bigger is NOT better.)

When purchasing a prefabricated chimney to install with your stove, ensure you also purchase from the same manufacturer the wall pass-through (or ceiling support package), "T" section package, fire-stops (when needed), insulation shield, roof flashing, chimney cap, and any other required accessories.
Follow the manufacturer's instructions when installing the chimney and accessories. In addition, ensure you maintain all manufacturers' recommendations for the proper clearances to the chimney.

Connection to a Masonry Chimney

Consider two primary elements when connecting your stove to a masonry chimney: the chimney itself and the thimble where the stovepipe connects to the chimney. **Use only code approved masonry chimneys containing a proper flue liner.**

Before connecting to a masonry chimney, hire a professional to examine the chimney for cracks, loose mortar, and other signs of deterioration and blockage. If the chimney needs repair, complete them before installing and using your stove. Do not install your stove until the chimney is safe for use.

Ensure the chimney's cleanout is complete and working properly. To avoid a loss of draft, the cleanout door must close completely and provide a tight seal. If the cleanout door leaks, the chimney will cool, your stove will perform poorly, and creosote can form.

Ensure the size of the chimney's flue is appropriate for this stove and that it is not too large. Use a masonry chimney with a maximum 7" Diameter or 8" x 8" (203 mm x 203 mm) tile size for best results. An oversized flue contributes to the accumulation of creosote.

Use the following checklist to ensure that your masonry chimney meets these minimum requirements:

MASONRY CHIMNEY WALL CONSTRUCTION :

- Mortared brick or modular block at least 4" (102 mm) thick – must use liner

- A mortared rubble or stone wall – must use liner

FLUE LINER OPTIONS :

- Tile - minimum wall thickness of 5/8" (16 mm), installed with refractory mortar, and with at least 1" (25 mm) air space around the liner
- Stainless steel - UL listed 7" diameter, insulated or wrapped liner, or the space around the liner filled with vermiculite or suitable material (these keep the liner warmer for better performance)
- Ensure any equivalent flue liner is a listed chimney liner system meeting type HT requirements or other approved material.

INTERIOR CHIMNEY REQUIREMENTS :

- Must have at least 2" (51 mm) clearance to combustible materials
- Must install fire stops at the spaces where the chimney passes through floors and/or ceiling
- Any insulation material must be at least 2" (51 mm) from the chimney

EXTERIOR CHIMNEY REQUIREMENTS :

- At least 1" (25 mm) clearance to combustible materials

CHIMNEY HEIGHT REQUIREMENTS (SEE *FIGURE 9*):

- At least 3 feet (0.9 m) higher than the highest part of the roof opening through which it passes.
- At least 2 feet (0.6 m) higher than any part of the roof within 10 feet (3 m) measured horizontally from the top of the chimney.

The recommended minimum chimney height is 15 feet (4.5 m) off the floor. The recommended maximum chimney height is 45 feet (13.5m). This Invicta series requires a draft between 0.06" and 0.1" water column. Ensure your chimney is long enough to provide the minimum draft, and use a damper if your installation has a required chimney height that provides too much draft.

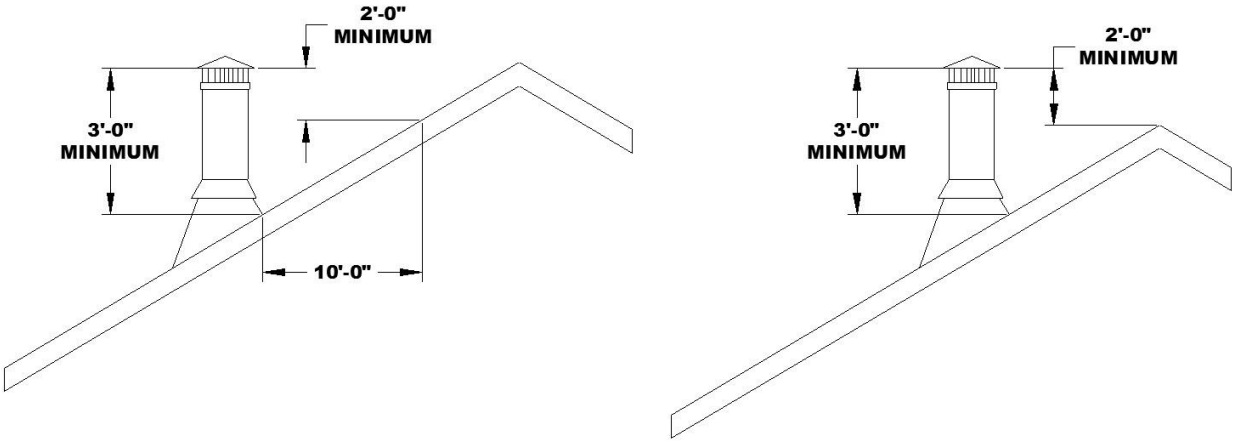

Figure 8 – Chimney Height Requirements

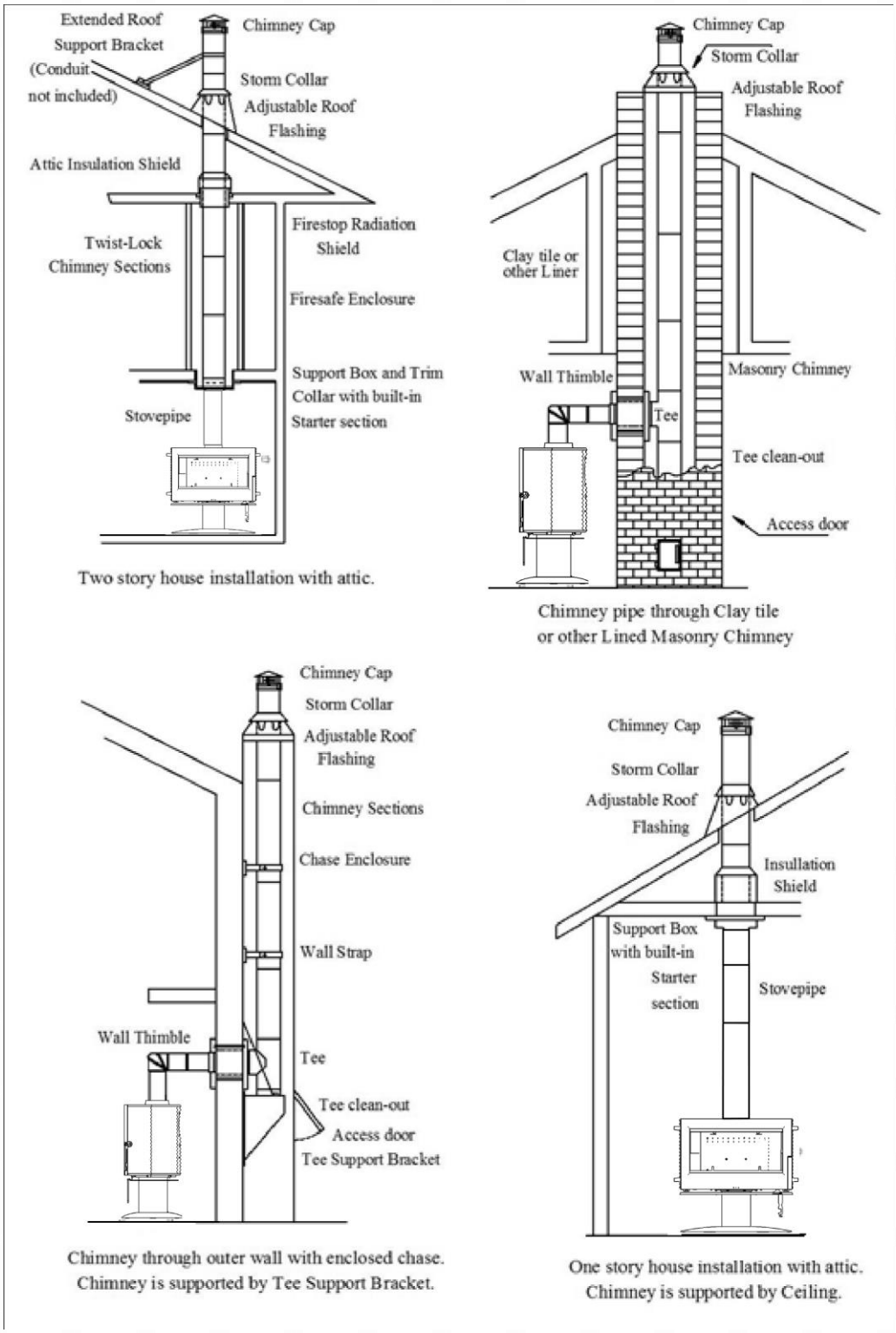

Figure 9 – Typical Chimney Configurations

OPERATION

Once your INVICTA is installed, you are ready to light a fire.

Every installation, season's firewood, and operator's technique varies. Learn how to use your stove most efficiently for your installation. We can give you the basic principles, but only you can ensure maximizing the potential of your stove while also operating it safely.

- **WARNING : HOT WHILE IN OPERATION ! KEEP CHILDREN, PETS, CLOTHING AND FURNITURE AWAY. CONTACT MAY CAUSE SKIN BURNS.**

Read this entire chapter before lighting your first fire. It explains the controls and features of your wood stove, how to choose firewood, and how to use your stove on a daily basis.

CONTROLS AND FEATURES

Before lighting any fires, become familiar with the location and operation of your stove's controls and features and learn how to use them (*See Figure 10*). For your own safety, do not modify these features in any way. We recommend you use fireplace gloves when the stove is in operation and hot.

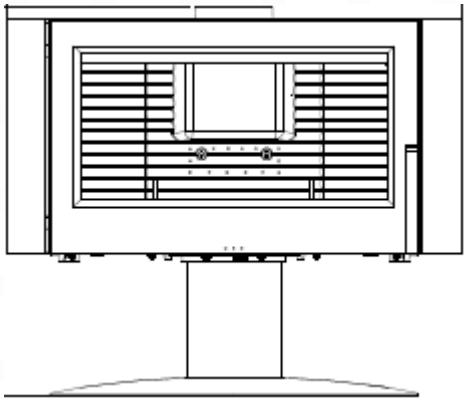

Figure 10 - Controls & Features

OPENING THE DOOR

A glove is provided with your stove. Use it always when manipulating the door opening tool (cold hand). Always remove and place the cold hand away but close by the stove when not using it. Never let the cold hand hung in position to the stove. Burn may occur.

BURN RATE: This wood heater has a manufacturer pre-set burn rate that must not be altered. It is against federal regulations to alter this setting or otherwise operate this wood heater in a manner inconsistent with operating instructions in this manual.''

CHOOSING FIREWOOD

Burn only natural firewood (known as cordwood) in this INVICTA Wood Heater. This stove is not designed to burn other fuels.

- **CAUTION: DO NOT USE CHEMICALS OR FLAMMABLE FLUIDS TO START THE FIRE. DO NOT USE CHARCOAL, PELLETS, COAL, ARTIFICIAL LOGS OR ANY OTHER MATERIALS AS FUEL; THEY ARE NOT SAFE. DO NOT BURN GARBAGE OR FLAMMABLE FLUIDS.**
- **THE USE OF UNAUTHORIZED FUEL SUCH AS COAL COULD PRODUCE HIGH LEVELS OF CARBON DIOXIDE IN THE LIVING SPACE. AT HIGH LEVELS CARBON DIOXIDE COULD RESULT IN PERSONAL INJURY OR DEATH.**

The quality of your firewood directly affects heat output, duration of burn and performance of your stove. Softwoods generally burn hotter and faster, while hardwoods burn longer and produce better coals. Density and moisture content are two critical factors to consider when purchasing wood.

The following is a list of some wood species and their relative BTU (British Thermal Unit) content. The higher the BTU content, the longer the burn. Firewood with higher BTUs is generally ideal for a wood stove.

Burn untreated wood only. Other materials such as wood preservatives, metal foils, coal, plastic, garbage, sulphur, or oil may create creosote.

Wood Heat Value: Sorted By Btu Content

Common Name	Lb/ cord	MBTU/ cord
High		
Osage Orange (Hedge)	4,728	32.9
Hickory, Shagbark	4,327	27.7
Hop Hornbeam (Ironwood)	4,267	27.3
Beech, Blue (Ironwood)	3,890	26.8
Birch, Black	3,890	26.8
Locust, Black	3,890	26.8
Hickory, Bitternut	3,832	26.7
Locust, Honey	3,832	26.7
Apple	4,100	26.5
Mulberry	3,712	25.8
Oak, White	4,012	25.7

Medium High		
Beech, European	3,757	24
Maple, Sugar	3,757	24
Oak, Red	3,757	24
Ash, White	3,689	23.6
Birch, Yellow	3,689	23.6

Medium		
Juniper, Rocky Mtn	3,150	21.8
Elm, Red	3,112	21.6
Coffee tree, Kentucky	3.112	21.6
Hackberry	3,247	20.8
Tamarack	3,247	20.8
Birch, Gray	3,179	20.3
Birch, White (Paper)	3,179	20.3
Walnut, Black	3,192	20.2
Cherry	3,120	20
Ash, Green	2,880	19.9
Cherry, Black	2,880	19.9
Elm, American	3,052	19.5
Elm, White	3,052	19.5
Sycamore	2,808	19.5
Ash, Black	2,992	19.1
Maple, Red	2,924	18.7
Fir, Douglas	2,900	18.1

Medium Low		
Boxelder	2,797	17.9
Alder, Red	2,710	17.2
Pine, Jack	2,669	17.1
Pine, Norway (Red Pine)	2,669	17.1
Pine, Pitch	2,669	17.1
Catalpa	2,360	16.4
Hemlock	2,482	15.9
Spruce, Black	2,482	15.9
Pine, Ponderosa	2,380	15.2

Low		
Aspen, American	2,290	14.7
Butternut (Walnut, White)	2,100	14.5
Spruce	2,100	14.5
Willow	2,100	14.5
Fir, Balsam	2,236	14.3
Pine, White (Eastern, Western)	2,236	14.3
Fir, Concolor (White)	2,104	14.1
Basswood (Linden)	2,108	13.8
Buckeye, Ohio	1,984	13.8
Cottonwood	2,108	13.5
Cedar, White	1,913	12.2

Moisture content also plays a key role in the performance of your stove. Wood freshly cut from a living tree (green wood) contains a great deal of moisture. As you might expect, green wood burns poorly. You must season green wood before using it in your wood stove. To season green wood properly, split, stack, and allow it to air dry for a period of one year. Green wood may provide less than 2000 Btu per pound, whereas dry wood can provide up to 7000 Btu per pound.

Stack the firewood on skids or blocks to keep it off the ground, cover only the top of the stack. Plastic or tarps that cover the sides of the woodpile trap moisture and prevent the wood from drying. As for stacking, an old Vermonter said, "The spaces between the logs should be large enough for a mouse to get through, but not for the cat that's chasing it."

- **CAUTION: DO NOT STORE FIREWOOD WITHIN THE STOVE'S SPECIFIED CLEARANCES TO COMBUSTIBLE MATERIALS.**

BUILDING A FIRE

Once you understand the controls of your wood stove and have the appropriate firewood, you are ready to start a fire.

- **WARNING: NEVER USE GASOLINE, GASOLINETYPE LANTERN FUEL, KEROSENE, CHARCOAL LIGHTER FLUID, OR SIMILAR LIQUIDS TO START OR 'FRESHEN UP' A FIRE IN THIS HEATER.**
  KEEP ALL SUCH LIQUIDS WELL AWAY FROM THE HEATER WHILE IT IS IN USE.

BREAKING IN YOUR WOOD STOVE

It is imperative that your stove is "broken in" gradually. Cast Iron must be "seasoned"; overfiring a new stove may cause cast iron to crack or may damage other stove parts. Natural moisture must be driven out slowly to minimize the “shock” to the cast iron of its first exposure to high firebox temperatures. In addition, the asbestos-free furnace cement must be cured slowly to ensure adequate sealing and bonding.

When you light your first fires, the woodstove will emit some smoke and fumes. This is normal “off gassing”

of the paints and oils used when manufacturing the woodstove. If you find it necessary, open a few windows to vent your room. The smoke and fumes will usually subside after 10 to 20 minutes of operation. The odor and smoke will end once the stove is “cured”.

The first few fires of the season may produce other odors from impurities that exist in the area immediately surrounding the stove. Some potential impurities are cleaning solvents, paint solvents, cigarette smoke, and soot from scented candles, pet hair, dust, adhesives, a new carpet, and new textiles. These odors will dissipate over time. You can alleviate these odors by opening a few windows or otherwise creating additional ventilation around your stove. If any odor persists, contact your dealer or an authorized service technician.

If you adhere to the operating procedures in this manual, the steel and cast iron components of your stove will give you many years of trouble-free use.

Avoid the following conditions that can cause the glass, steel or cast iron pieces to break:

- Do not throw wood into the stove.
- Do not use the door as a lever to force wood into the stove.
- Do not load wood encrusted with ice into a burning stove - the thermal shock can cause damage.
- Do not use a manufactured log grate or otherwise support the fuel. Burn the fire directly on the floor of the firebox.

BUILDING A BREAK IN FIRE

1) Open the front door and place five or six double sheets of tightly twisted newspaper in the center of the firebox. Arrange kindling in a crisscross pattern over the newspaper. Kindling should be approximately ten pieces, 1/2" (13 mm) in diameter and 10" to 16" (254 mm to 457 mm) long.

2) Light the paper under the kindling. Leave the door slightly ajar momentarily until the kindling has started to burn and draft begins to pull.

3) Close the door and allow the fire to burn. Keep the door closed while the stove is in use.

4) KEEP A WATCHFUL EYE ON YOUR STOVE to maintain a steady fire. Your first fire should make the stove warm but **not hot to the touch**. Visible steam, or boiling moisture and hissing indicate the cast iron is too hot. At most, a few small chunks of wood should be added to the fire to reach safe break-in temperatures.

5) Once the stove is warm but **not hot to the touch,** allow the fire to die out completely.

6) Let the stove return to room temperature.

Your first fire and first fire each season thereafter should be built and maintained as outlined above. Your patience will be rewarded by a properly seasoned stove.

 NOTE : The cool flue gas temperatures present during the break-in procedure may cause rapid creosote build-up. The door glass may also get dirty. A good hot fire will clean it. We recommend a visual inspection (and cleaning if necessary) of your stovepipe and chimney once the break-in procedure is completed.

NORMAL OPERATION

BUILDING A FIRE FOR EVERYDAY USE

1) Open the front door and place five or six double sheets of tightly twisted newspaper in the center of the firebox. Arrange kindling in a tee-pee configuration over the newspaper. Use approximately 10 pieces of kindling, 1/2" (13 mm) in diameter and 10" to 16" (254 mm to 406 mm) long.

2) Light the paper under the kindling. Leave the front door slightly ajar momentarily until the kindling begins to burn and draft begins to pull (about 10 to 15 minutes).

3) Close the door and allow the fire to burn.

4) Once the kindling is burning, open the front door and add logs, small at first, to build the fire up. Ensure you keep the logs away from the glass in front in order for the air-wash system to work properly. Keep the front door closed while the stove is in use.

   CAUTION: DO NOT BUILD THE FIRE TOO CLOSE TO THE GLASS. KEEPING THE FIRE TOWARDS THE CENTER OF THE FIRE BOX WILL KEEP COALS FROM BUILDING UP AGAINST THE GLASS DURING RELOADING.

5) Once the fire is burning well, close the front door. Now the combustion is steady and your stove will be burning at its optimal efficiency.

Note: Always remember to use the cold handle before opening the front door. When opening the front door to reload or re-arrange logs, it is advisable to open the door just a crack, pause for a moment then

open the door completely. This procedure allows the firebox to clear of smoke before the door is open fully. In addition, reloading on a bed of hot, red coals reduces smoking time and brings fresh fuel up to a high temperature rapidly. During the refueling and rekindling of a cool fire, or a fire that has burned down to the charcoal phase, operate the stove with the door slightly crack for about 10 minutes to ensure that the fire is relighting faster. Once the fire as relight, door can be closed.

OVER-FIRE CAUTION

Over-firing means the stove is operating at temperatures above normal temperatures reached during High Burns outlined in the *BURN RATE* section. Carefully avoid over-firing, as it will damage the stove. Symptoms of chronic over-firing can include warped components, short burn times, a roaring sound in the stove or stovepipe, and discoloration of the stovepipe. A properly installed stove using fuel and following operating procedures as outlined in this manual should not over-fire.

Excessive draft, inappropriate fuel, and operator error can cause over-firing. Correct an over-fier situation as follows:

- **EXCESSIVE DRAFT:** Contact your local dealer to have a draft reading taken. Any draft in excess of 0.1 WC requires a damper in the stovepipe. Some installations may require more than one damper.
- **INAPPROPRIATE FUEL:** Do not burn coal; kiln dried lumber, wax logs, compressed wood, highly volatile fuels or combustibles, or anything other than natural cordwood.
- **OPERATOR ERROR:** Ensure all the gaskets are in good condition. Replace worn out or compressed gaskets. Only burn the stove with the firing and ash doors in the closed position.

If you suspect your stove is over-firing, discontinue use and contact your dealer immediately. **Damage caused by over-firing is not covered by your warranty**. Results of over-firing can include warped or burned out internal parts, cracked refractory panels, discolored or warped external parts, and damaged finish.

- **ANY SIGNS OF OVER-FIRING WILL VOID YOUR WARRANTY!**
- **THE FRONT DOOR MUST REMAIN CLOSED WHEN IN OPERATION**

REMOVAL AND DISPOSAL OF ASHES

You can leave a thin layer of ashes in the firebox if preferred. Allow fire to die down or go out completely. It is important to prevent ashes from building up around the front door opening or they will spill out, or they can pack into the gasket channel and prevent proper sealing. To remove ashes, use a fireplace shovel. Avoid removing large live coals by pushing them to the side and removing only the finer ash with a shovel.

Disposal of ashes - Ashes should be placed directly into a **metal** container with a tight fitting lid. Do not place any other items or trash into the metal container. Do not pour water into the container. Replace the container's lid and allow the ashes to cool. Never place the ash disposal container on a combustible surface or vinyl flooring, as the container could be **hot!**

Pending disposal, place the closed ash container on a non-combustible floor or on the ground outside, well away from all combustible materials, liquid fuels, or vehicles. Retain ashes in the closed container until all coals thoroughly cool.

If the ashes are disposed of by burial in soil or otherwise locally dispersed, they should be retained in the closed container until all cinders have thoroughly cooled.

NEVER place ashes in wooden or plastic containers, in trashcans with other trash, or in paper or plastic bags, no matter how long the fire has been out. Coals within a bed of ashes can remain hot for several days once removed from the firebox.

MAINTENANCE

INSPECTION AND REPLACEMENT PROCEDURES

- **WARNING : THIS WOOD HEATER NEEDS PERIODIC INSPECTION AND REPLACEMENT FOR PROPER OPERATION. IT IS AGAINST FEDERAL REGULATIONS TO OPERATE THIS WOOD HEATER IN A MANNER INCONSISTENT WITH OPERATING INSTRUCTIONS IN THIS MANUAL**

INSPECTING AND REMOVING/REPLACING THE BAFFLE

1. Allow the stove and ashes to fully cool.
2. Lift up on the right side baffle, and gently pull the left side baffle down and out of the stove.

4. Ensure that the baffle pieces are pushed together at the center joint.

CAUTION - Do not force the baffle pieces. Gently adjust the baffle orientation until each side can be removed freely from the stove.

GLASS REPLACEMENT PROCEDURES

- **WARNING : DO NOT OPERATE THIS APPLIANCE WITH THE GLASS PANEL REMOVED, CRACKED, OR BROKEN. DO NOT SUBJECT THE DOOR TO ABUSE, SUCH AS STRIKING OR SLAMMING SHUT. ONLY A QUALIFIED SERVICE PERSON SHOULD REPLACE THE GLASS PANEL.**

1. Follow the instructions included with the replacement glass kit.

2. Remove the screws from the glass clips (use penetrating oil if necessary) – Set aside for

3.

4. reinstallation.
5. Carefully lift the damaged glass off the door and discard.
6. Remove any remaining glass and old gasket material.
7. Clean the screw holes and place a small amount of anti-seize compound in each one.
8. Install a new glass gasket in the glass gasket groove.
9. Place the new glass onto the door.
10. **Important! Center the glass** and ensure that the edges of the glass are parallel with the edges of the opening.
11. Check glass position again (centered, and parallel), then screw the glass retainer clips with the glass pads back on the door using a crisscross pattern. Tighten the screws no more than 1/8th of a turn after they seat. The glass will break at this point if not positioned correctly.
12. Apply a light film of anti-seize lubricant on the door's hinge pins if needed.
13. After 5 or 6 fires, check the glass retainer screws, and retighten if necessary. Use only 4mm x 329mm x 395mm Ceramic, or

Neoceram glass. Contact your INVICTA dealer.

Figure 20: Front Door assembly

CREOSOTE FORMATION & REMOVAL

When wood burns slowly at low temperatures, it may produce tar and other organic vapors, which combine with expelled moisture to form creosote. These creosote vapors condense in the relatively cool chimney flue of a slow-burning fire. As a result, creosote residue accumulates on the flue lining. When ignited, this creosote makes an

extremely hot fire, which may damage the chimney or even destroy the house. When burning wood, inspect the chimney connector and chimney at least once every two months during the heating season to determine if there is a creosote buildup.
If a creosote build-up occurs, inspect the stovepipe connector and chimney more often, at least monthly during the heating season to monitor the accumulation. If a creosote residue greater that 1/4" (6 mm) accumulates, remove it to reduce the risk of a chimney fire.

PREVENTION

Burn the stove with the door slightly crack for 15 - 20 minutes daily to burn out creosote deposits from within the stove and the venting system.

After reloading with wood, burn the stove with the door slightly crack for 15 to 20 minutes. This manner of operation ensures early engagement of the secondary combustion system that minimizes creosote buildup in the chimney.

If your glass always remains dirty, your wood is wet; therefore, there is a higher risk of creosote buildup.

Inspect the venting system at the stove connection *and* at the chimney top. Cooler surfaces tend to build creosote deposits faster, so it is important to check the chimney at the top (where it is coolest) as well as from the bottom near the stove. **CLEANING**

Remove accumulated creosote with a cleaning brush specifically designed for the type of chimney in use. We recommend you use a certified chimney sweep to perform this service. Contact your dealer for the name of a certified chimney sweep in your area (your dealer may be a certified sweep!).

We recommend that before each heating season you have the entire system professionally inspected, cleaned and repaired, if necessary.

GASKETS

Replace door gasket material every two to three seasons, or whenever it becomes deteriorated or loose, depending on stove use. If the door seal leaks, a new gasket will ensure a tight seal and improve stove performance.

We recommend you only use INVICTA replacement gaskets when you need to replace your door gasket. Contact your dealer for a gasket kit that includes instructions, and the gasket for your stove.

GLASS

The glass used in our stoves is actually not plain glass, but a tough, clear ceramic material capable of operating at temperatures up to 2300° F. Do not operate the stove with a broken door glass. Do not abuse the front door by striking or slamming.

When necessary, clean the glass. For the inside surface of the glass, we recommend using a damp paper towel dipped in gray ash. Rub the inside of the glass with a circular motion. When all the deposits are removed, clean up with window cleaner or with commercial stove glass cleaners, which are available from your local dealer. Use this type of cleaner for the outside surface as well. Never attempt to clean the glass while the fire is burning or while the glass is hot. Remove deposits by following the instructions provided with the cleaner. Wipe the cleaner off with a soft cloth, or black & white newsprint.

> **Important:** scratching or etching the glass will weaken the integrity of the glass. Do not use a razor blade, steel wool, or any other abrasive material to clean the glass. Use a cleaner specifically manufactured for woodstoves only.

The front door glass is a ceramic, thermal shock resistant glass, made specifically for use in woodstoves. Do not use any replacement glass other than the ceramic glass manufactured and supplied for use in this woodstove. Replacement glass is available through your local dealer.

Replace the door glass immediately if broken or chipped. Contact your local dealer for replacement glass. The glass kit includes instructions and everything needed for the repair. If you replace the glass yourself, wear work gloves and safety glasses.

TROUBLESHOOTING

COMMON ISSUES

Virtually all woodstove operators experience basic common problems at one time or another. Most are correctable and generally require only a minor adjustment of the stove, installation, or operating technique. In cases where weather conditions

dramatically affect stove performance, the problems are typically temporary and solve themselves once the weather changes.

If you question whether your stove is producing adequate heat, the best way to troubleshoot the problem is to monitor the temperature of the stack no more than 12 inches (30 cm) above the flue collar. A 400° F (200° C) stovepipe confirms the stove is supplying sufficient heat. Keep in mind that your house itself will regulate room/house temperatures. How well the walls, floors and ceilings are insulated, the number and size of windows, the tightness of outside doors, and the construction or style of your house (vaulted ceilings or other open spaces which collect large percentages of heat, ceiling fans, etc.) all are determining factors of room temperature.

Your stove's performance is also dependent on its installation. One common cause of poor performance is an oversized chimney flue. Oversized chimney flues result in decreased draft, which prevents the smoke from rising out the chimney. Oversized flues are also more difficult to heat effectively, especially when burning a high efficiency stove. Cool flue temperatures inhibit the establishment of a strong draft (and encourage the accumulation of creosote). The lack of a strong draft will cause the fire to die down and may even force smoke to pour into the room.

If your chimney is the proper size and a strong draft is not easily established, there is the possibility that the chimney is too cold. Again, hot chimneys promote stronger drafts. Opening a window briefly in the room while lighting the stove may help.

Other draft guidelines are as follows:

An **"AIRTIGHT" HOUSE:** The air supply (infiltration) to the interior of the house may be inadequate if your home is super-insulated or especially well sealed. This phenomenon of air starvation within the building is exacerbated if exhaust fans, such as clothes dryers, bathroom fans or cook stove exhaust fans, are in operation within the home. Outfitting your stove with an optional outside air dispenser, which leads to the outside of the building, can correct this problem.

Tall Trees or Buildings: These obstructions, when located close to the top of the chimney can cause chronic or occasional downdrafts. When selecting a site for a new chimney, consider the placement of other objects near the proposed chimney location.

Wind Velocity: Generally, the stronger and steadier a wind, the stronger (better) the draft. However, "gusty" wind conditions can cause erratic downdrafts. For consistent problems, consider a high wind cap, such as the Vacu-Stack.

Barometric Pressure: Chimney drafts are typically sluggish on balmy, wet or muggy days (low barometric pressure). This is a weather-related phenomenon, which generally is self-correcting as the weather changes.

Briskness of Fire: The hotter the fire in your stove, the hotter your chimney and, therefore, the stronger the draft.

Breaks in the Venting System: An unsealed clean-out door at the bottom of the chimney, leaky stovepipe joints, a poor stovepipe-to-thimble connection, missing caps, or a leaky chimney all can cause inadequate draft.

Seasonal Factors: Early fall and late spring are generally difficult seasons in which to establish proper drafts. The colder the outside air is relative to room temperature, the stronger the draft.

OPERATING THE STOVE

As outlined above, there are days when a good draft is just not easy to establish. The causes are usually seasonal factors or a cold chimney. Try starting the fire by using small kindling and fuel to obtain a quick, hot fire. Tend the fire frequently with small fuel until the chimney is hot and the draft is well established. Sometimes, partially opening a first floor window briefly will help quickly get draft established.

TROUBLESHOOTING GUIDE

PROBLEM	POSSIBLE CAUSE	SOLUTIONS
STOVE SMOKES	Operating Technique	Slightly crack the door one minute before fully opening doors.
	Cold Chimney or reverse draft	Preheat the chimney when first starting a fire. Briefly open a window in the room containing the stove.
	Blocked Chimney	Examine the chimney and stovepipe for blockage or creosote accumulations.
	Oversized Chimney	Reline the chimney to the appropriate diameter
	Undersized Chimney	Install a draft inducer or replace the chimney.
	Chimney Too Short	Lengthen the chimney.
	Air Infiltration into The Chimney	Seal chimney connections and openings. Check clean-out doors.
	Not burning proper fuel	Ensure cordwood is seasoned and dry.
	More Than One Appliance Connected to the Flue	Disconnect all other appliances and seal openings.
BACK-PUFFING OR GAS EXPLOSIONS	Operating Technique	Slightly crack door one minute before fully opening the door and keep it fully open for a few minutes after reloading.
	Chimney Down-draft	Install a chimney cap.
	Excessive Ash Build-up	Empty the ash pan more frequently. Increase efficiency of burns, and avoid using poor quality or green wood.
UNCONTROLLED OR SHORT BURN	Unsealed or Open Door	Close the door tightly or replace the gaskets. Air leakage around glass gasket – replace gasket
	Excessive Draft	Check the installation. Install stovepipe damper. Draft in excess of 0.1 wc should be corrected with a stovepipe damper(s)
	Extra Long Chimney	Shorten the chimney. Install stovepipe damper(s).
	Oversized Chimney	Reline the chimney to the proper diameter.
	High Winds or Hilltop Location:	Install a chimney cap.
INSUFFICIENT HEAT	Poor Quality, low Btu content, or Green Wood	Use only air-dried wood, preferably dried <u>at least</u> one year. Use a wood with a high Btu content if available.
	Cold Exterior Chimney	Reline or insulate the chimney.
	Leaky Stovepipe or Chimney	Check the installation. Replace with a pre-fabricated insulated chimney system or a properly sized masonry chimney.
	Too Much Heat Loss From House	Add insulation, use energy efficient windows, or caulk windows, and seal openings in home.
	Excessive Ash Build-up	Empty the ash pan more frequently. Increase efficiency of burns, and avoid using poor quality or green wood.
BLISTERING OF FINISH	Operating Technique	Do not over-fire the stove. Monitor stove temperatures. Use seasoned wood only.
	Excessive Draft	Check the DRAFT. A damper may be required. Operate the stove at a LOW BURN range.

SAFETY LABEL

CONTACT YOUR LOCAL BUILDING OFFICIALS ABOUT
RESTRICTIONS AND INSTALLATION INSPECTION IN YOUR AREA

Listed Room Heater. Solid Fuel Type

Conforms to UL STD 1482
Certied to ULC STD S627

Manufactured by:
Invicta
1361, Denison
St-Alphonse-De-Granby,
Qc, Canada, J0E 2A0

MODEL NAME:
ANTAYA 6114-44
THEÍA 6113-44
GAYA ARDOISE 6117-44
GAYA FEUILLE 6118-44
ITAYA 6110-44
SYMPHONIA 6115-44

SERIAL NUMBER:
[redacted]

CAUTION: HOT WHILE IN OPERATION. DO NOT TOUCH. KEEP CHILDREN, CLOTHING, AND FUNITURE AWAY. CONTACT MAY CAUSE SKIN BRUNS. SEE NAMEPLATE AND INSTRUCTIONS, INSPECT AND CLEAN CHUMNEY AND CONNECTOR FREQUENTLY, UNDER CERTAIN CONDITIONS OF USE, CREOSOTE BUILDUP MAY OCCUR RAPIDLY.

WARNINGS

Do not use grade or elevate fire. Build wood fire directly on hearth. Do not overrfire. If the heater or chimney connector glows, you are overfiring
(See Operator's Manual)

OPERATE ONLY WITH DOORS CLOSED. DO NOT OBSTRUCT SPACE UNDER HEATER.
TYPE OF FUEL: CORD WOOD ONLY BURNING FUEL: OTHER THAN CORDWOOD MAY DAMAGE THE APPLIANCE

" PREVENT HOUSE FIRES"

Install and use only in accordance with manufacturer's installation instructions and your local bulding codes.

CAUTION: Special methods are required when passing chimney through a wall or celling, refer to local buildind codes. Do not connect this unit to a chimney flue serving another appliance.

NOTE: Replace glass only with 4mm ceramic glass.

This wood heater needs perodic inspection and repair for proper operation. Consult the owner's manual for further information.
It's against Federal regulation to operate this wood heater in a manner in inconsistent with the operating instruction in the owner's manual.

Minimum Clearance to Combustible Materials*

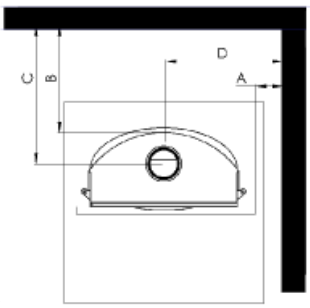

Floor Protection*

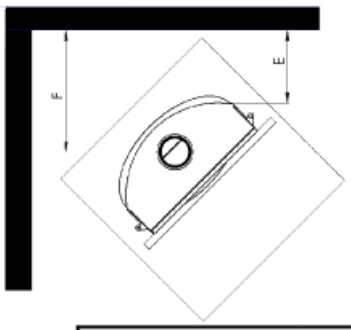

When install on a combustible floor, non-combustible floor protection is required to cover the area beneath the heater, and extend at least 16" (in US) or 18" (in CAN) to the front and 8" beyond of the fuel loading and ash removal (in US) (Canada is 8" from the side of stove), the floor protection must extend under the flue connector and extend 2" beyond each side of pipe.

VENT REQUIREMENTS: 7" diameter. single wall, minimum 24 MSG blue steel connector with listed factory-built Type HT chimney or masonry chimney

	Parallel				Corner	Corner
Clearances	A	B	C	D	E	F
Single wall Connector	18"-46cm	19"-48cm	26"-66cm	35"-89cm	21-53cm	31.5"-80cm
Double Wall Connector – Inc. Rear Heat Shield	18"-46cm	12"-30cm	18.5"-47cm	34.5"-87cm	21"-53cm	31.5"-80cm

* Refer to the installation Manual for additional clearance information. Installation Instructions, and operating Instructions.

U.S. ENVIRONMENTAL PROTECTION AGENCY
Partuculate Emissions: 1.9g/hr. Tested to : EPA 28 Single burn rate stove.
Certified to comply with 2020 crib wood particulate emissions standards.

Date of Manufacture

2020 ■ 2021 ■ 2022 ■ 2023 ■ JAN ■ FEV ■ MAR ■ APR ■ MAY ■ JUN ■ JUL ■ AOU ■ SEP ■ OCT ■ NOV ■ DEC ■

DO NOT REMOVE OR COVER THIS LABEL

WARRANTY

CONTRACTUAL GUARANTEE

DURATION The duration of our guarantee is10 years on the firebox body and 3 years for all casting component having direct contact with the fire like the ashes grid, the chenet and the baffle, counting from the date of delivery by the installer or the date of point of sale. The guarantee applies during this period to all defects of parts or of manufacture. We are only responsible for the free replacement of parts found defective, after verification by ourselves. If the replacement of these parts would prove too expensive, we reserve the right to replace the appliance, a decision we alone can make.

LEGAL GUARANTEE The provisions of this guarantee do not preclude the purchaser from benefiting from the legal guarantees on equipment, covering faults and defects, which apply in any event under the conditions of article 1641 and following of the civil code.

VALIDITY The purchaser designated hereunder, acknowledging having received the notice of installation and of use, agrees to conform to it for safety reasons.

This guarantee is only valid if the appliance is used according to the rules and recommendations stated on the Instructions for Installation and Use, supplied with the appliance.

The appliance must be installed at the address quoted on the certificate of guarantee.

The other components are guaranteed for 1 year, such as : latch, screws and bolts, springs, fans, printed circuits, switch, electric thimbles, wire, electric sheaths, etc...

EXCLUSION The glass is resistant to a temperature of 750°C, and the temperatures in the combustion chamber never reach this temperature, a breakage of glass cannot occur as a result of overheating. Therefore, the breakage of the glass, due to a bad manipulation on installation or the handling of the appliance, is not covered by the guarantee.

The joints are considered items which are subject to wear.

The fuel used and the control of the apparatus, being outside our control, the parts of the stove in direct contact with the ignited fuel, are not included in the cover of the guarantee, including : fireplate, fire grate, vent, log barrier. The cost of travelling, of transport, of workmanship, of packaging, of disassembly and the consequences of the immobilization of the appliance, resulting from the operations of the guarantee, are the sole responsibility of the customer.

Any disorder caused on any part of the installation, by mechanical or electrical parts which we have not supplied and which are prohibited by the texts governing heating appliances.
The damage caused by the use of any other fuel than wood.

Date of purchase (start of the guarantee) : .....

PURCHASER

SURNAME : .....
First name : .....
Address : .....
Postal Code : ..... Town : ..... Country : .....

SUPPLIER

Designation of the appliance : .....

Reference : .....

ANNEX – PARTS

Poêle à bois GAYA ARDOISE référence 6117 44

POÊLE À BOIS GAYA ARDOISE référence 6117 44

Repère	Nbr	Désignation	Référence
1	1	Buse 7 pouces visée	**ED** BVS-7002
2	1	Dessus	**FB** 610582
3	1	Base de Buse	**ED** BVS-7001
4	4	Tirant	**AS** 610127A
5	4	Vis tête fraisée POZY de 6x16	**AV** 8656160
6	4	Vis tête bombée hexagonale creuse de 6x20	**AV** 8686200
7	1	Fond	**FB** 610586
8	1	Côté gauche	**FB** 610584
9	1	Côté droit	**FB** 610583
10	1	Tampon	**FB** 610130
11	17	Rondelle de 6	**AV** 4100060
12	20	Ecrou de 6	**AV** 7100060
13	2	Ecrou de 8	**AV** 7100080
14	2	Rondelle de 8	**AV** 4100080
15	1	Deflecteur	**ED** CCD-1000
16	2	Vis tête bombée hexagonale creuse de 6x35	**AV** 8686350
17	1	Taque	**G 493494J**
18	2	Ecrou borgne de 6	**AV** 7140062
19	1	Sole foyère	**FB** 610590
20	1	Grille foyère gauche	**FB** 610588
21	1	Grille foyère droite	**FB** 610587
22	1	Guide d'air	**FB** 610589
23	1	Socle	**FB** 610580
24	2	Bride d'appui	**AT** 610112A
25	1	Registre d'arrivée d'air prim aire	**ED** REO-1001
26	8	Vis tête fraisée empreinte hexagonale creuse de 6x20	**AV** 8636200
27	2	Vis tête fraisée empreinte hexagonale creuse de 8x25	**AV** 8638250
28	3	Tirant de pietement	**AS** 610131A
29	1	Tube	**AT** 610138A
30	4	Ecrou frein de 6	**KAV** 7010060
31	1	Pied	**FB** 610591
32	1	Porte décorative gauche	**FB** 610605
33	1	Porte décorative droite	**FB** 610606
34	4	Clou Ø10	**AS** 610133B
35	1	Registre d'arrivée d'air secondaire	**ED** RES-1000
36	1	Façade	**FB** 610581
37	1	Porte	**FB** 610585
38	1	Axe de porte haut, goupille cannelée de 6x40	**AV** 6306400
39	1	Axe de porte bas, goupille cannelée de 6x40	**AV** 6306400
40	2	Vis tête fraisée empreinte hexagonale creuse de 6x30	**AV** 8636300
41	1	Loquet de fermeture	**FB** 610596
42	1	Rondelle élastique de 8	**AV** 4170081
43	1	Vis de fixation du loquet de fermeture	**AS** 610155A
44	1	Main froide (poignée)	**ED** HAN-1002
45	1	Ecrou bas de réglage de fermeture	**AV** 7130060
46	1	Bague de roulement fermeture (entretoise)	**AS** 610153A
47	1	Excentrique de réglage de fermeture	**AS** 610125A
48	1	Vitre	**AX** 611044
49	4	Attache de vitre	**AS** 700262
50	6	Vis tête cylindrique de 4x6	**AV** 8644062
51	1	Cendrier	**AT** 610136A
52	1	Plaque signalétique	**PS 611244**
53	2	Rivet de 3x8	**AV** 5203080
54	2	Rondelle entretoise	**AS** 610132A
55	2	Lamelle ressort	**AS** 610124A
56	2	Joint de buse et de tampon Ø5, longueur 0.635 mètres	**AI** 303005
57	1	Joint de sole foyère Ø8, longueur 0.5 mètres	**AI** 303008
58	1	Joint de façade Ø8, longueur 3.3 mètres	**AI** 303008
59	1	Joint de porte/vitrage Ø5, longueur 2.2 mètres	**AI** 303005
60	1	Joint de façade plat, 0.805 mètres	**AI** 302001
61	4	Ressort de blocage	**AS** 610126A
62	1	Joint thermocode Ø12, longeur 1.23 mètres	**AI** 303012
63	1	Support de poignée	**ED** HAN-1001
64	1	Laine isolante	**ED** HSW-0001
65	1	Support de laine olante	**ED** HSF-1001
66	1	Laine isolante	

Poêle à bois ITAYA

référence 6110 44

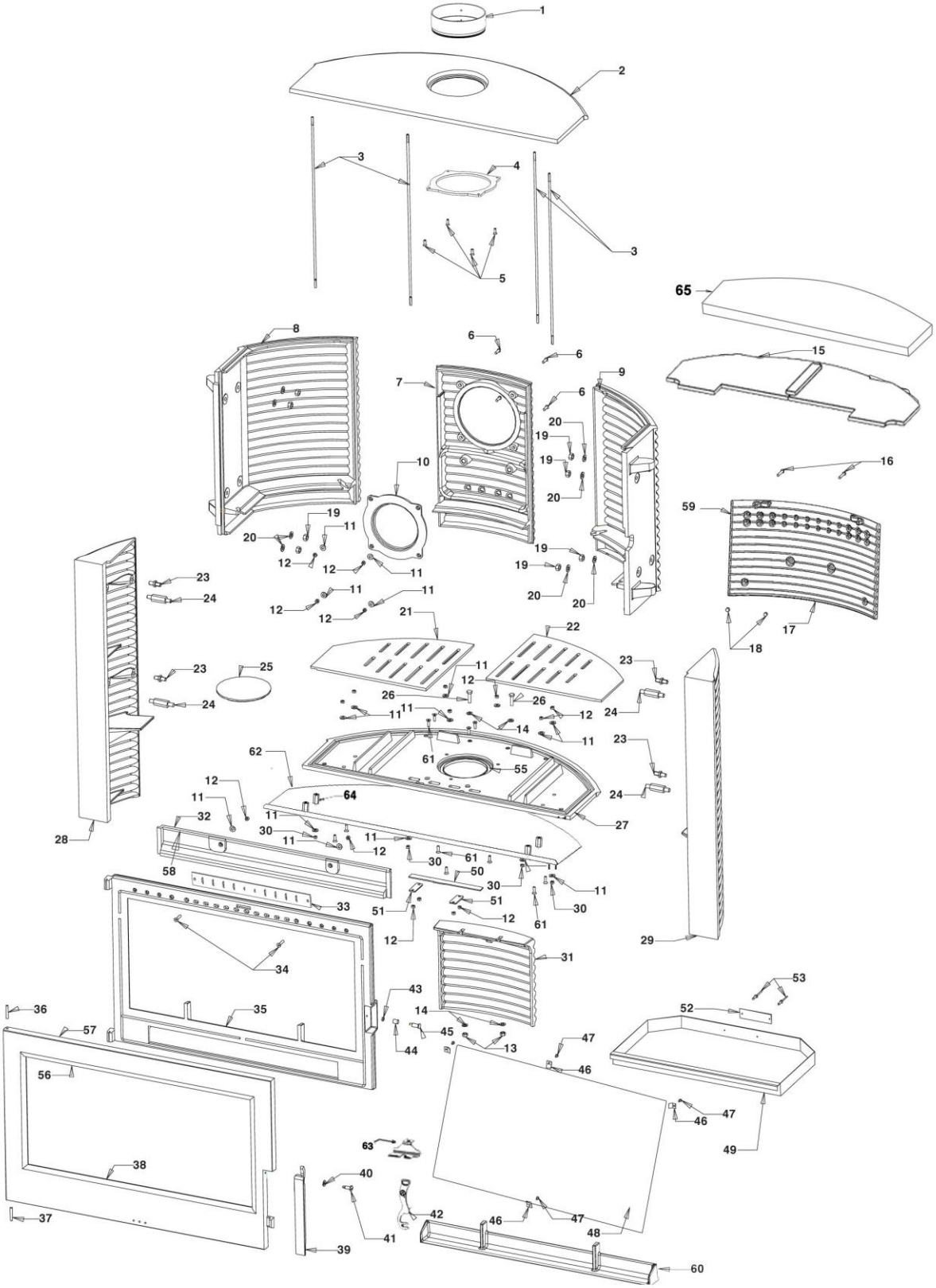

POÊLE À BOIS ITAYA référence 6110 44

Repère	Nbr	Désignation	Référence
1	1	Buse 7 pouces visée	ED BVS-7002
2	1	Dessus	FB 610582
3	4	Tirant	AS610127A
4	1	Base de Buse	ED BVS-7001
5	4	Vis tête fraisée POZY de 6x16	AV 8656160
6	4	Vis tête bombée hexagonale creuse de 6x20	AV 8686200
7	1	Fond	ED 610586
8	1	Coté gauche	FB 610584
9	1	Côté droit	FB 610583
10	1	Tampon	FB 610130
11	17	Rondelle de 6	AV 4100060
12	17	Ecrou de 6	AV 7100060
13	2	Ecrou de 8	AV 7100080
14	14	Rondelle de 8	AV 4100080
15	1	Deflecteur	ED CCD-1000
16	2	Vis tête bombée hexagonale creuse de 6x35	AV 8686350
17	1	Taque	G 493494J
18	2	Ecrou borgne de 6	AV 7140062
19	8	Ecrou de 10	AV 7100100
20	8	Rondelle de 10	AV 4100100
21	1	Grille foyère gauche	FB 610588
22	1	Grille foyère droite	FB 610587
23	4	Entretoise petit modèle	AS 610129C
24	4	Entretoise grand modèle	AS 610130C
25	1	Sole foyère	FB 610590
26	2	Vis tête hexagonale de 8x30	AV 8408300
27	1	Socle	FB 610580
28	1	Pied gauche	FB 610594
29	1	Pied droit	FB 610595
30	4	Ecrou frein de 6	KAV 7010060
31	1	Pied arrière	FB 610593
32	1	Guide d'air	FB 610589
33	1	Registre d'air secondaire	ED RES-1000
34	2	Vis tête fraisée empreinte hexagonale creuse de 6x35	AV 8636350
35	1	Facade	FB 610581
36	1	Axe de porte bas, goupille cannelée de 6x40	AV 6306400
37	1	Axe de porte haut, goupille cannelée de 6x40	AV 6306400
38	1	Porte	FB 610585
39	1	Loquet de fermeture	FB 610596
40	1	Rondelle élastique de 8	AV 4170081
41	1	Vis de fixation du loquet de fermeture	AS 610155A
42	1	Main froide (poignée)	ED HAN-1002
43	1	Ecrou bas de réglage fermeture	AV 7130060
44	1	Bague de roulement fermeture (entretoise)	AS 610153A
45	1	Excentrique de réglage de fermeture	AS 700253B
46	4	Attache de vitre	AS 700262
47	4	Vis tête cylindrique de 4x6	AV 8644062
48	1	Vitre	AX 611044
49	1	Cendrier	AT 610136A
50	1	Opturateur de régistre	ED REO-1001
51	2	Bride d'appui	AT 610112A
52	1	Plaque signalétique	PS 611044
53	2	Rivet de 3x8	AV 5203080
54	2	Rondelle entretoise	AS 610132A
55	1	Joint de sole foyère Ø8, longueur 0.5 mètres	AI 303008
56	1	Joint de façade Ø8, longueur 3.3 mètres	AI 303008
57	1	Joint de porte/vitrage Ø5, longueur 2.2 mètres	AI 303005
58	1	Joint de façade plat, longueur 0.805 mètres	AI 302001
59	1	Joint thermocorde Ø12, longueur 1.23 mètres	AI 303012
60	1	Chenet	FB 610643
61	11	Vis tête fraisée empreinte hexagonale creuse de 6x20	AV 8636200
62	1	Pare-chaleur	ED HSL-1001
63	1	Support de poignée	ED HAN-1001
64	4	Espaceur 6mm X 1 - 25mm	ED QST-6125
65	1	Laine isolante	

INVICTA FRANCE Poêle à bois GAYA FEUILLE référence 6118 44

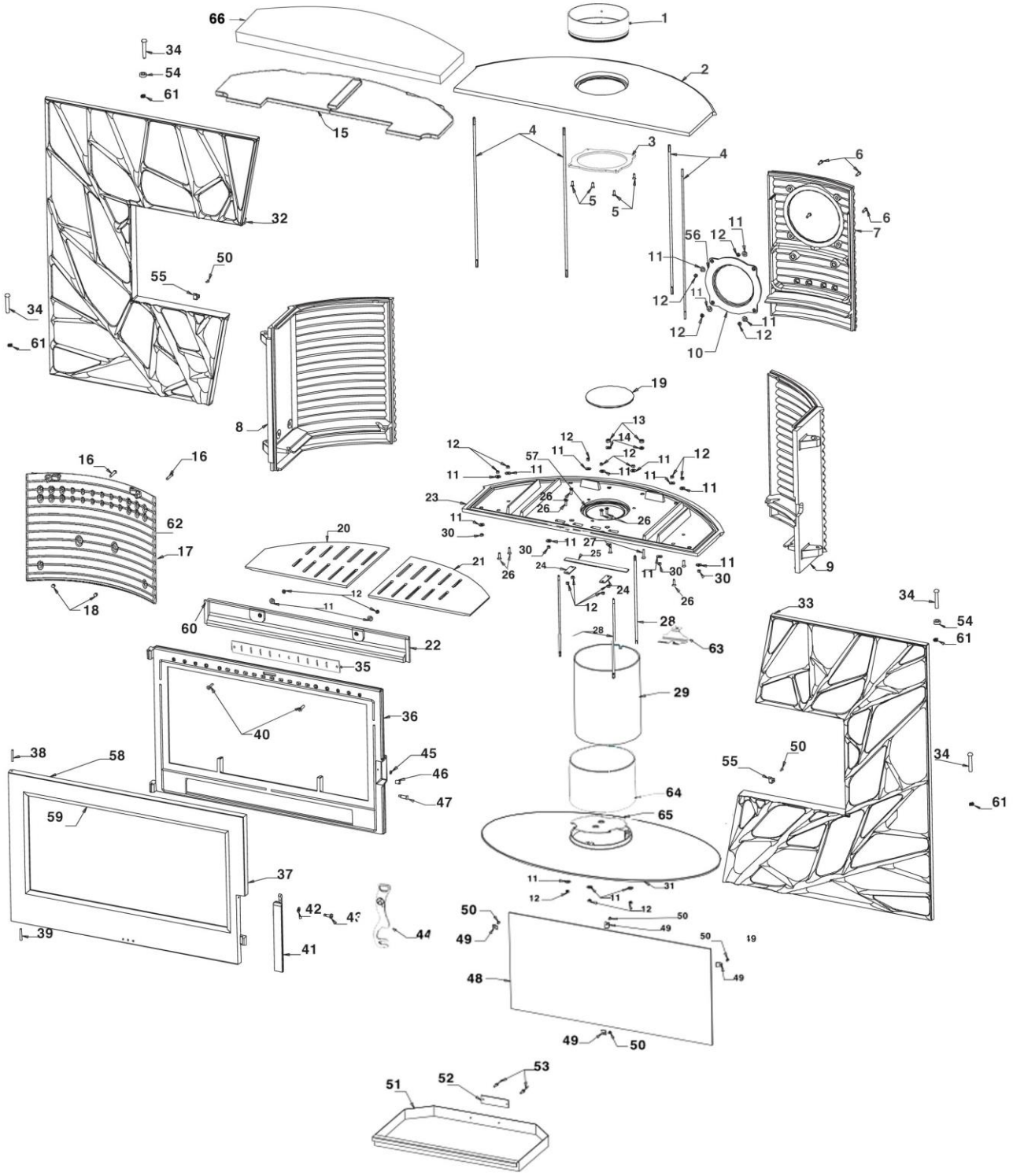

POÊLE À BOIS GAYA FEUILLE référence 6118 44

Repère	Nbr	Désignation	Référence
1	1	Buse 7 pouces visée	ED BVS-7002
2	1	Dessus	FB 610582
3	1	Base de Buse	ED BVS-7001
4	4	Tirant	AS 610127A
5	4	Vis tête fraisée POZY de 6x16	AV 8656160
6	4	Vis tête bombée hexagonale creuse de 6x20	AV 8686200
7	1	Fond	ED 610586
8	1	Coté gauche	FB 610584
9	1	Côté droit	FB 610583
10	1	Tampon	FB 610130
11	17	Rondelle de 6	AV 4100060
12	20	Ecrou de 6	AV 7100060
13	2	Ecrou de 8	AV 7100080
14	2	Rondelle de 8	AV 4100080
15	1	Deflecteur	ED CCD-1000
16	2	Vis tête bombée hexagonale creuse de 6x35	AV 8686350
17	1	Taque	G 493494J
18	2	Ecrou borgne de 6	AV 7140062
19	1	Sole foyère	FB 610590
20	1	Grille foyère gauche	FB 610588
21	1	Grille foyère droite	FB 610587
22	1	Guide d'air	FB 610589
23	1	Socle	FB 610580
24	2	Bride d'appui	AT 610112A
25	1	Registre d'arrivée d'air prim aire	ED REO-1001
26	8	Vis tête fraisée empreinte hexagonale creuse de 6x20	AV 8636200
27	2	Vis tête fraisée empreinte hexagonale creuse de 8x25	AV 8638250
28	3	Tirant de pietement	AS 610131A
29	1	Tube	AT 610138A
30	4	Ecrou frein de 6	KAV 7010060
31	1	Pied	FB 610591
32	1	Porte décorative gauche	FB 610603
33	1	Porte décorative droite	FB 610604
34	4	Clou Ø10	AS 610133B
35	1	Registre d'arrivée d'air secondaire	ED RES-1000
36	1	Façade	FB 610581
37	1	Porte	FB 610585
38	1	Axe de porte haut, goupille cannelée de 6x40	AV 6306400
39	1	Axe de porte bas, goupille cannelée de 6x40	AV 6306400
40	2	Vis tête fraisée empreinte hexagonale creuse de 6x30	AV 8636300
41	1	Loquet de fermeture	FB 610596
42	1	Rondelle élastique de 8	AV 4170081
43	1	Vis de fixation du loquet de fermeture	AS 610155A
44	1	Main froide (poignée)	ED HAN-1002
45	1	Ecrou bas de réglage de fermeture	AV 7130060
46	1	Bague de roulement fermeture (entretoise)	AS 610153A
47	1	Excentrique de réglage de fermeture	AS 610125A
48	1	Vitre	AX 611044
49	4	Attache de vitre	AS 700262
50	6	Vis tête cylindrique de 4x6	AV 8644062
51	1	Cendrier	AT 610136A
52	1	Plaque signalétique	PS 611244
53	2	Rivet de 3x8	AV 5203080
54	2	Rondelle entretoise	AS 610132A
55	2	Lamelle ressort	AS 610124A
56	2	Joint de buse et de tampon Ø5, longueur 0.635 mètres	AI 303005
57	1	Joint de sole foyère Ø8, longueur 0.5 mètres	AI 303008
58	1	Joint de façade Ø8, longueur 3.3 mètres	AI 303008
59	1	Joint de porte/vitrage Ø5, longueur 2.2 mètres	AI 303005
60	1	Joint de façade plat, 0.805 mètres	AI 302001
61	4	Ressort de blocage	AS 610126A
62	1	Joint thermocode Ø12, longeur 1.23 mètres	AI 303012
63	1	Support de poignée	ED HAN-1001
64	1	Laine isolante	ED HSW-0001
65	1	Support de laine isolante	ED HSF-1001
66	1	Laine isolante	

Poêle à bois Symphonia

référence 6115 44

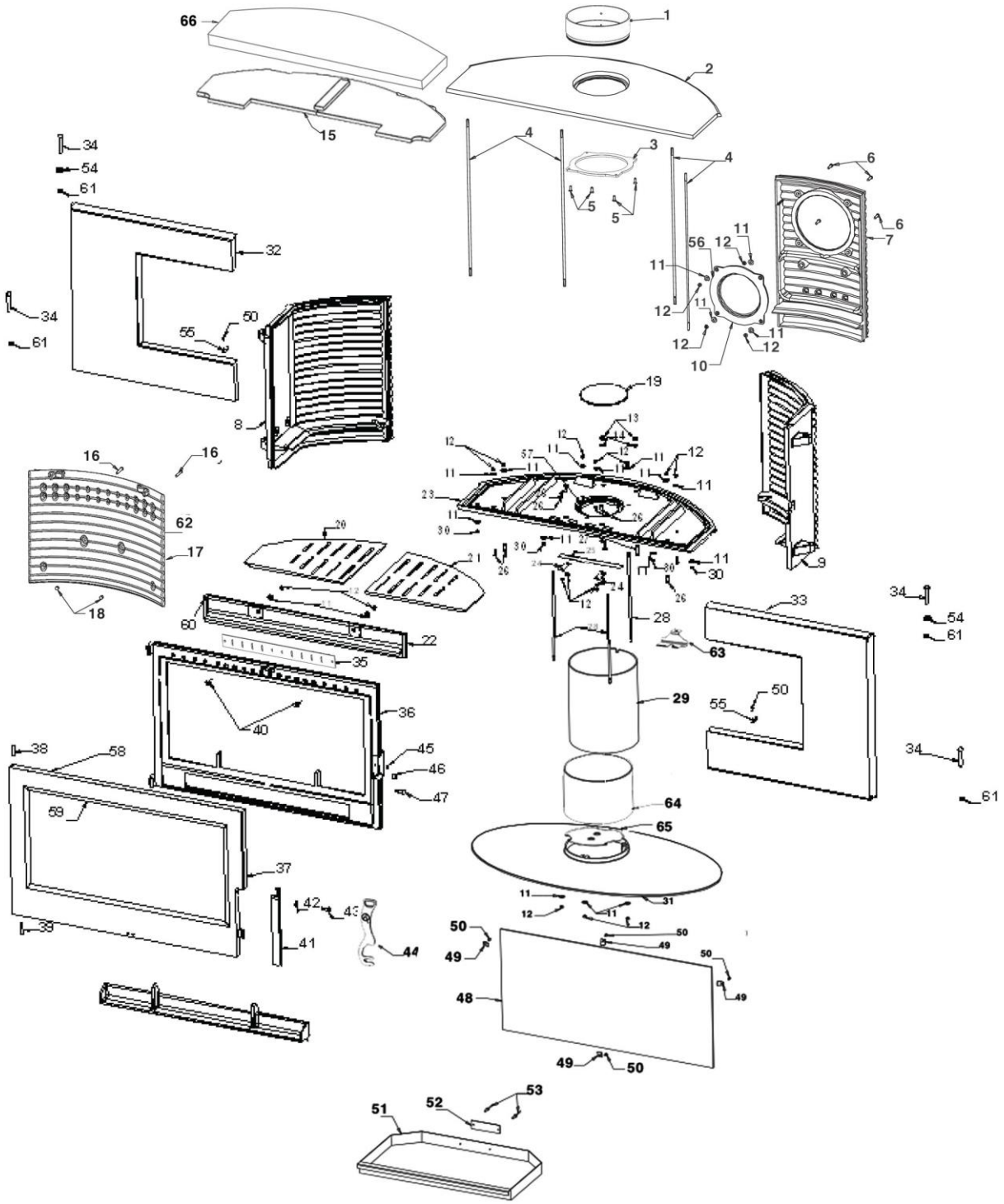

POÊLE À BOIS SYMPHONIA référence 6115 44

Repère	Nbr	Désignation	Référence
1	1	Buse 7 pouces visée	ED BVS-7002
2	1	Dessus	FB 610582
3	1	Base de Buse	ED BVS-7001
4	4	Tirant	AS 610127A
5	4	Vis tête fraisée POZY de 6x16	AV 8656160
6	4	Vis tête bombée hexagonale creuse de 6x20	AV 8686200
7	1	Fond	FB 610586
8	1	Coté gauche	FB 610584
9	1	Côté droit	FB 610583
10	1	Tampon	FB 610130
11	17	Rondelle de 6	AV 4100060
12	20	Ecrou de 6	AV 7100060
13	2	Ecrou de 8	AV 7100080
14	2	Rondelle de 8	AV 4100080
15	1	Deflecteur	ED CCD-1000
16	2	Vis tête bombée hexagonale creuse de 6x35	AV 8686350
17	1	Taque	G 493494J
18	2	Ecrou borgne de 6	AV 7140062
19	1	Sole foyère	FB 610590
20	1	Grille foyère gauche	FB 610588
21	1	Grille foyère droite	FB 610587
22	1	Guide d'air	FB 610589
23	1	Socle	FB 610580
24	2	Bride d'appui	AT 610112A
25	1	Registre d'arrivée d'air prim aire	ED REO-1001
26	8	Vis tête fraisée empreinte hexagonale creuse de 6x20	AV 8636200
27	2	Vis tête fraisée empreinte hexagonale creuse de 8x25	AV 8638250
28	3	Tirant de pietement	AS 610131A
29	1	Tube	AT 610138A
30	4	Ecrou frein de 6	KAV 7010060
31	1	Pied	FB 610591
32	1	Porte décorative gauche	FB 610609
33	1	Porte décorative droite	FB 610608
34	4	Clou Ø10	AS 610133B
35	1	Registre d'arrivée d'air secondaire	ED RES-1000
36	1	Façade	FB 610581
37	1	Porte	FB 610585
38	1	Axe de porte haut, goupille cannelée de 6x40	AV 6306400
39	1	Axe de porte bas, goupille cannelée de 6x40	AV 6306400
40	2	Vis tête fraisée empreinte hexagonale creuse de 6x30	AV 8636300
41	1	Loquet de fermeture	FB 610596
42	1	Rondelle élastique de 8	AV 4170081
43	1	Vis de fixation du loquet de fermeture	AS 610155A
44	1	Main froide (poignée)	ED HAN-1002
45	1	Ecrou bas de réglage de fermeture	AV 7130060
46	1	Bague de roulement fermeture (entretoise)	AS 610153A
47	1	Excentrique de réglage de fermeture	AS 610125A
48	1	Vitre	AX 611044
49	4	Attache de vitre	AS 700262
50	6	Vis tête cylindrique de 4x6	AV 8644062
51	1	Cendrier	AT 610136A
52	1	Plaque signalétique	PS 611003
53	2	Rivet de 3x8	AV 5203080
54	2	Rondelle entretoise	AS 610132A
55	2	Lamelle ressort	AS 610124A
56	2	Joint de buse et de tampon Ø5, longueur 0.635 mètres	AI 303005
57	1	Joint de sole foyère Ø8, longueur 0.5 mètres	AI 303008
58	1	Joint de façade Ø8, longueur 3.3 mètres	AI 303008
59	1	Joint de porte/vitrage Ø5, longueur 2.2 mètres	AI 303005
60	1	Joint de façade plat, 0.805 mètres	AI 302001
61	4	Ressort de blocage	AS 610134A
62	1	Joint thermocode Ø12, longeur 1.23 mètres	AI 303012
63	1	Support de poignée	ED HAN-1001
64	1	Laine isolante	ED HSW-0001
65	1	Support de laine isolante	ED HSF-1001
66	1	Laine isolante	

Poêle à bois ANTAYA

référence 6114 44

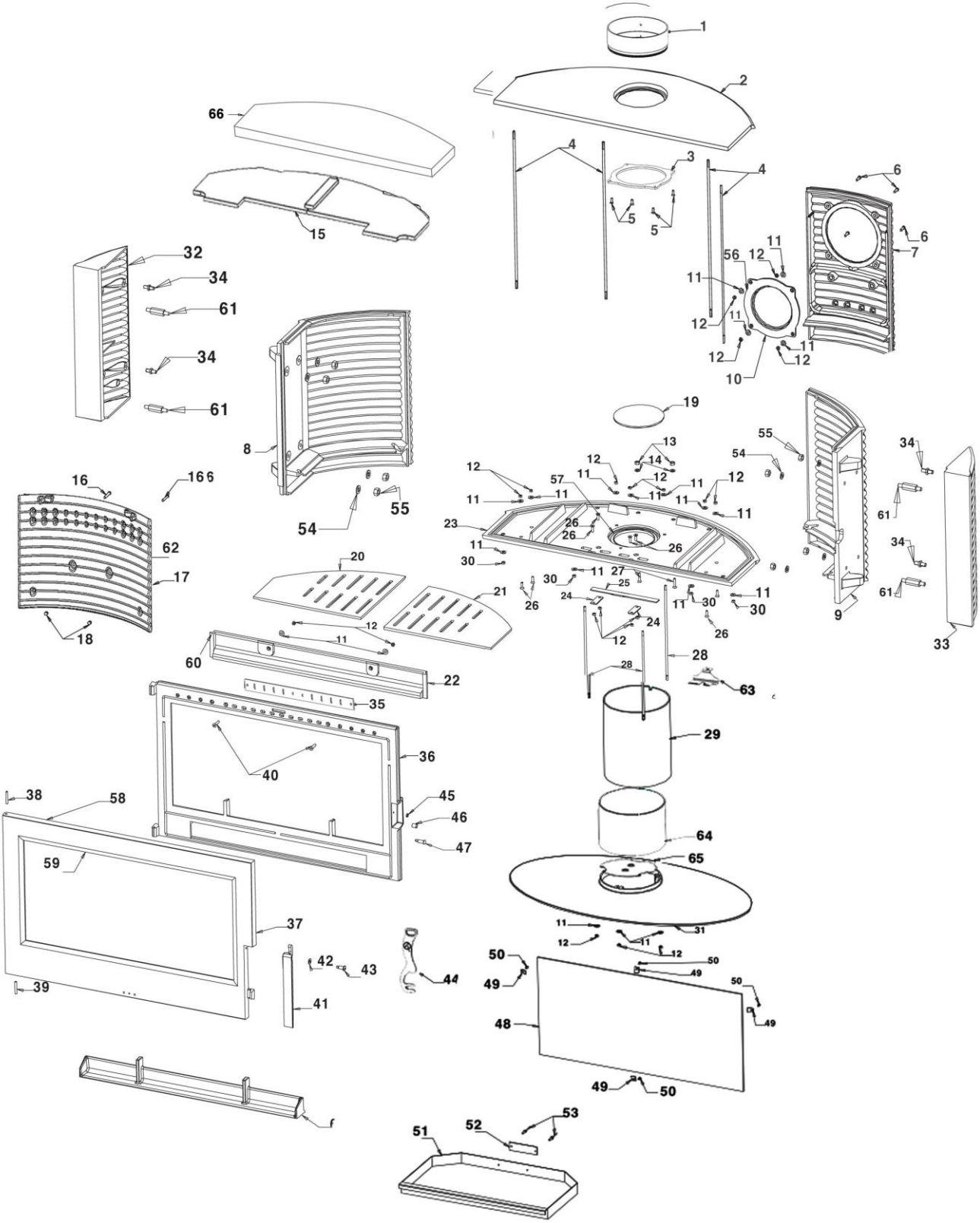

POÊLE À BOIS ANTAYA référence 6114 44

Repère	Nbr	Désignation	Référence
1	1	Buse 7 pouces visée	ED BVS-7002
2	1	Dessus	FB 610582
3	1	Base de Buse	ED BVS-7001
4	4	Tirant	AS 610127A
5	4	Vis tête fraisée POZY de 6x16	AV 8656160
6	4	Vis tête bombée hexagonale creuse de 6x20	AV 8686200
7	1	Fond	ED 610586
8	1	Coté gauche	FB 610584
9	1	Côté droit	FB 610583
10	1	Tampon	FB 610130
11	17	Rondelle de 6	AV 4100060
12	20	Ecrou de 6	AV 7100060
13	2	Ecrou de 8	AV 7100080
14	2	Rondelle de 8	AV 4100080
15	1	Deflecteur	ED CCD-1000
16	2	Vis tête bombée hexagonale creuse de 6x35	AV 8686350
17	1	Taque	G 493494J
18	2	Ecrou borgne de 6	AV 7140062
19	1	Sole foyère	FB 610590
20	1	Grille foyère gauche	FB 610588
21	1	Grille foyère droite	FB 610587
22	1	Guide d'air	FB 610589
23	1	Socle	FB 610580
24	2	Bride d'appui	AT 610112A
25	1	Registre d'arrivée d'air prim aire	ED REO-1001
26	8	Vis tête fraisée empreinte hexagonale creuse de 6x20	AV 8636200
27	2	Vis tête fraisée empreinte hexagonale creuse de 8x25	AV 8638250
28	3	Tirant de pietement	AS 610128A
29	1	Tube	AT 610138A
30	4	Ecrou frein de 6	KAV 7010060
31	1	Pied	FB 610591
32	1	Porte décorative gauche	FB 610601
33	1	Porte décorative droite	FB 610602
34	4	Clou Ø10	AS 610129C
35	1	Registre d'arrivée d'air secondaire	ED RES-1000
36	1	Façade	FB 610581
37	1	Porte	FB 610585
38	1	Axe de porte haut, goupille cannelée de 6x40	AV 6306400
39	1	Axe de porte bas, goupille cannelée de 6x40	AV 6306400
40	2	Vis tête fraisée empreinte hexagonale creuse de 6x30	AV 8636300
41	1	Loquet de fermeture	FB 610596
42	1	Rondelle élastique de 8	AV 4170081
43	1	Vis de fixation du loquet de fermeture	AS 610155A
44	1	Main froide (poignée)	ED HAN-1002
45	1	Ecrou bas de réglage de fermeture	AV 7130060
46	1	Bague de roulement fermeture (entretoise)	AS 610153A
47	1	Excentrique de réglage de fermeture	AS 610125A
48	1	Vitre	AX 611044
49	4	Attache de vitre	AS 700262
50	6	Vis tête cylindrique de 4x6	AV 8644062
51	1	Cendrier	AT 610136A
52	1	Plaque signalétique	PS 611244
53	2	Rivet de 3x8	AV 5203080
54	2	Rondelle entretoise	AS 610132A
55	2	Lamelle ressort	AS 610124A
56	2	Joint de buse et de tampon Ø5, longueur 0.635 mètres	AI 303005
57	1	Joint de sole foyère Ø8, longueur 0.5 mètres	AI 303008
58	1	Joint de façade Ø8, longueur 3.3 mètres	AI 303008
59	1	Joint de porte/vitrage Ø5, longueur 2.2 mètres	AI 303005
60	1	Joint de façade plat, 0.805 mètres	AI 302001
61	4	Ressort de blocage	AS 610130C
62	1	Joint thermocode Ø12, longeur 1.23 mètres	AI 303012
63	1	Support de poignée	ED HAN-1001
64	1	Laine isolante	ED HSW-0001
65	1	Support de laine isolante	ED HSF-1001
66	1	Laine isolante	

Poêle à bois THEÏA

référence 6113 44

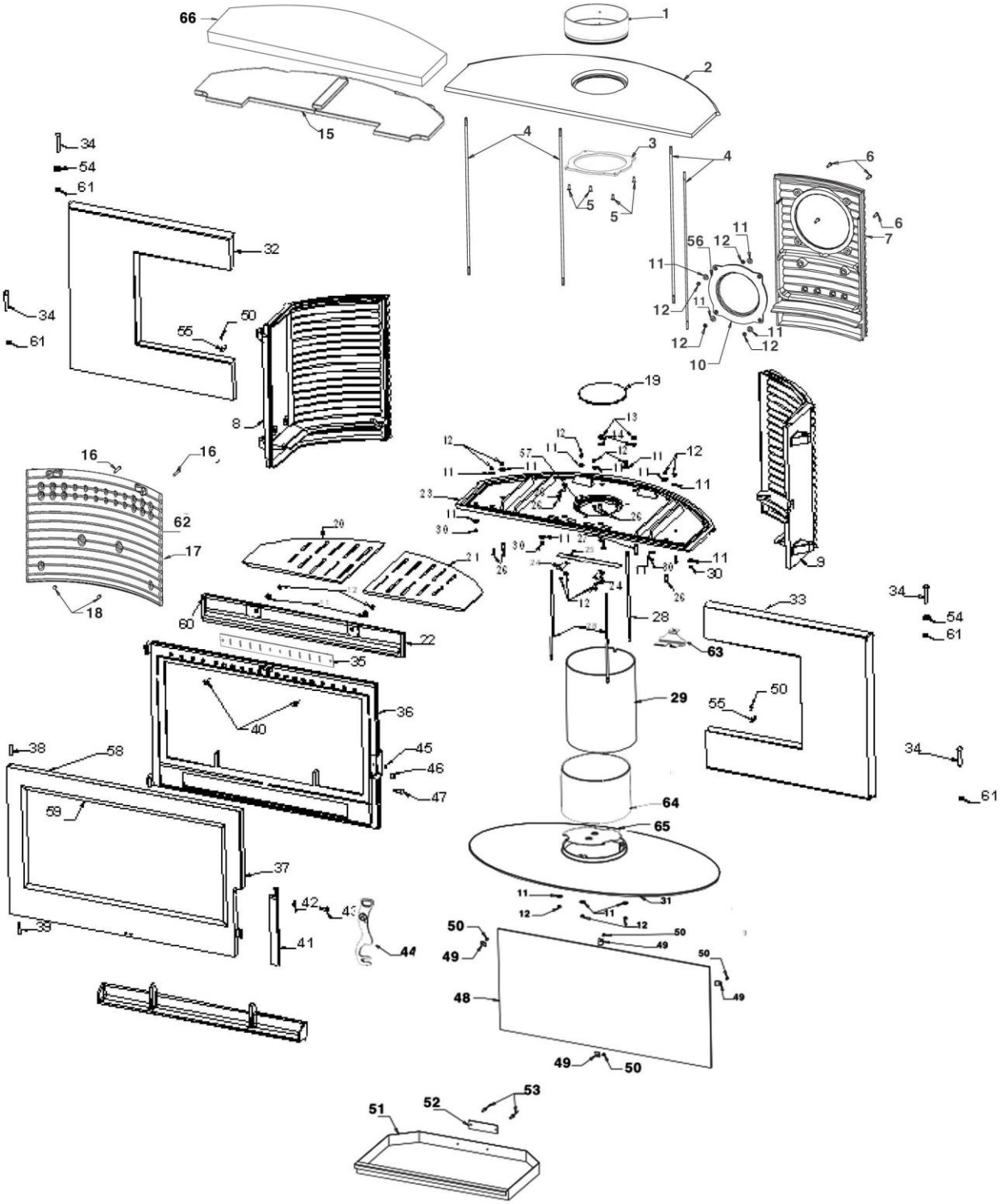

POÊLE À BOIS THEÏA référence 6113 44

Repère	Nbr	Désignation	Référence
1	1	Buse 7 pouces visée	ED BVS-7002
2	1	Dessus	FB 610582
3	1	Base de Buse	ED BVS-7001
4	4	Tirant	AS 610127A
5	4	Vis tête fraisée POZY de 6x16	AV 8656160
6	4	Vis tête bombée hexagonale creuse de 6x20	AV 8686200
7	1	Fond	ED 610586
8	1	Coté gauche	FB 610584
9	1	Côté droit	FB 610583
10	1	Tampon	FB 610130
11	17	Rondelle de 6	AV 4100060
12	20	Ecrou de 6	AV 7100060
13	2	Ecrou de 8	AV 7100080
14	2	Rondelle de 8	AV 4100080
15	1	Deflecteur	ED CCD-1000
16	2	Vis tête bombée hexagonale creuse de 6x35	AV 8686350
17	1	Taque	G 493494J
18	2	Ecrou borgne de 6	AV 7140062
19	1	Sole foyère	FB 610590
20	1	Grille foyère gauche	FB 610588
21	1	Grille foyère droite	FB 610587
22	1	Guide d'air	FB 610589
23	1	Socle	FB 610580
24	2	Bride d'appui	AT 610112A
25	1	Registre d'arrivée d'air prim aire	ED REO-1001
26	8	Vis tête fraisée empreinte hexagonale creuse de 6x20	AV 8636200
27	2	Vis tête fraisée empreinte hexagonale creuse de 8x25	AV 8638250
28	3	Tirant de pietement	AS 610128A
29	1	Tube	AT 610138A
30	4	Ecrou frein de 6	KAV 7010060
31	1	Pied	FB 610591
32	1	**Porte décorative gauche**	F 610527U
33	1	**Porte décorative droite**	F 610526U
34	4	Clou Ø10	AS 610133B
35	1	Registre d'arrivée d'air secondaire	ED RES-1000
36	1	Façade	FB 610581
37	1	Porte	FB 610585
38	1	Axe de porte haut, goupille cannelée de 6x40	AV 6306400
39	1	Axe de porte bas, goupille cannelée de 6x40	AV 6306400
40	2	Vis tête fraisée empreinte hexagonale creuse de 6x30	AV 8636300
41	1	Loquet de fermeture	FB 610596
42	1	Rondelle élastique de 8	AV 4170081
43	1	Vis de fixation du loquet de fermeture	AS 610155A
44	1	Main froide (poignée)	ED HAN-1002
45	1	Ecrou bas de réglage de fermeture	AV 7130060
46	1	Bague de roulement fermeture (entretoise)	AS 610153A
47	1	Excentrique de réglage de fermeture	AS 610125A
48	1	Vitre	AX 611044
49	4	Attache de vitre	AS 700262
50	6	Vis tête cylindrique de 4x6	AV 8644062
51	1	Cendrier	AT 610136A
52	1	Plaque signalétique	PS 611003
53	2	Rivet de 3x8	AV 5203080
54	2	Rondelle entretoise	AS 610132A
55	2	Lamelle ressort	AS 610124A
56	2	Joint de buse et de tampon Ø5, longueur 0.635 mètres	AI 303005
57	1	Joint de sole foyère Ø8, longueur 0.5 mètres	AI 303008
58	1	Joint de façade Ø8, longueur 3.3 mètres	AI 303008
59	1	Joint de porte/vitrage Ø5, longueur 2.2 mètres	AI 303005
60	1	Joint de façade plat, 0.805 mètres	AI 302001
61	4	Ressort de blocage	AS 610134A
62	1	Joint thermocode Ø12, longeur 1.23 mètres	AI 303012
63	1	Support de poignée	ED HAN-1001
64	1	Laine isolante	ED HSW-0001
65	1	Support de laine isolante	ED HSF-1001
66	1	Laine isolante	

Poêle à bois AKAN

référence 6111 44

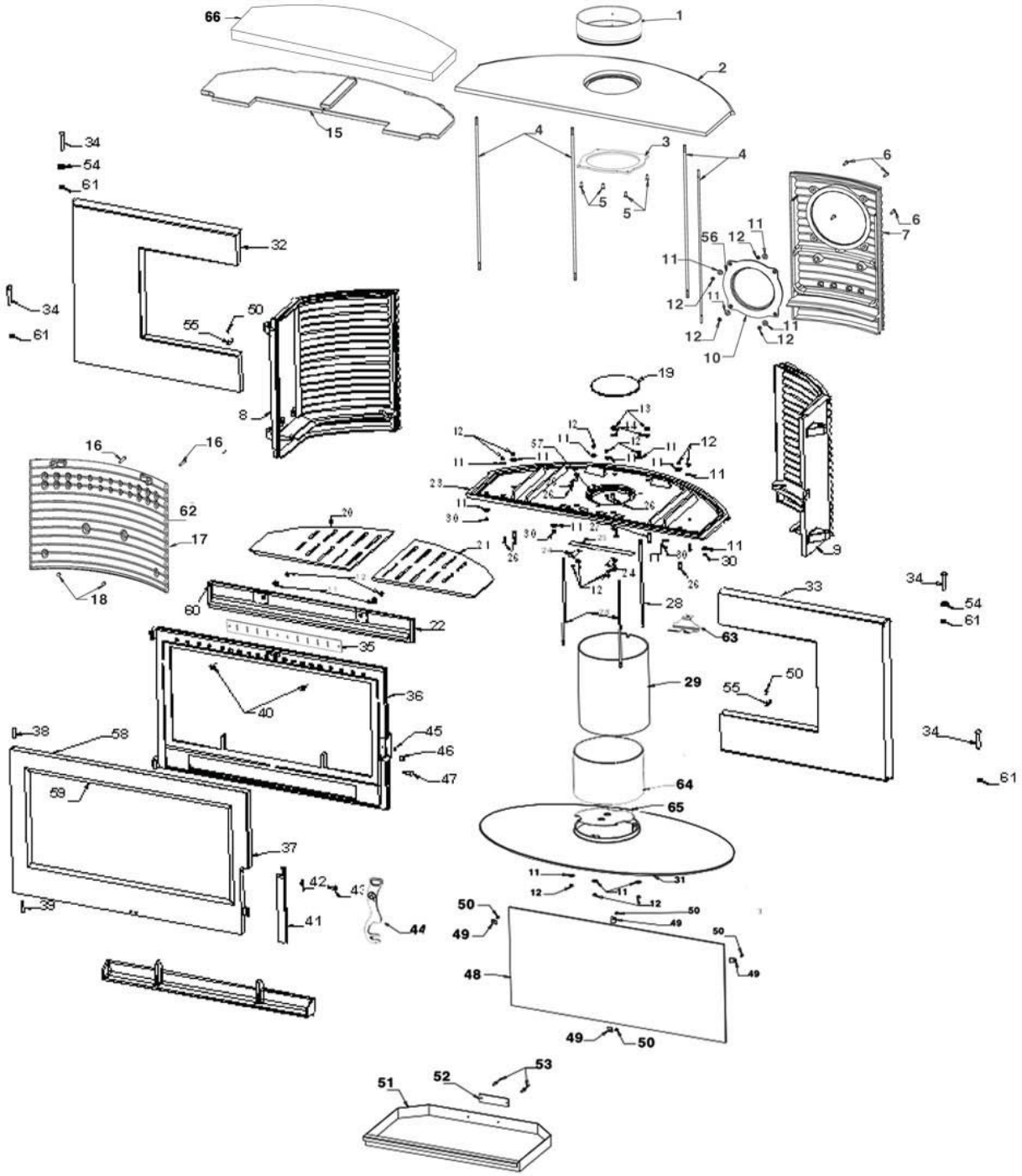

POÊLE À BOIS AKAN

référence 6111 44

Repère	Nbr	Désignation	Référence
1	1	Buse 7 pouces visée	ED BVS-7002
2	1	Dessus	FB 610582
3	1	Base de Buse	ED BVS-7001
4	4	Tirant	AS 610127A
5	4	Vis tête fraisée POZY de 6x16	AV 8656160
6	4	Vis tête bombée hexagonale creuse de 6x20	AV 8686200
7	1	Fond	ED 610586
8	1	Coté gauche	FB 610584
9	1	Côté droit	FB 610583
10	1	Tampon	FB 610130
11	17	Rondelle de 6	AV 4100060
12	20	Ecrou de 6	AV 7100060
13	2	Ecrou de 8	AV 7100080
14	2	Rondelle de 8	AV 4100080
15	1	Deflecteur	ED CCD-1000
16	2	Vis tête bombée hexagonale creuse de 6x35	AV 8686350
17	1	Taque	G 493494J
18	2	Ecrou borgne de 6	AV 7140062
19	1	Sole foyère	FB 610590
20	1	Grille foyère gauche	FB 610588
21	1	Grille foyère droite	FB 610587
22	1	Guide d'air	FB 610589
23	1	Socle	FB 610580
24	2	Bride d'appui	AT 610112A
25	1	Registre d'arrivée d'air prim aire	ED REO-1001
26	8	Vis tête fraisée empreinte hexagonale creuse de 6x20	AV 8636200
27	2	Vis tête fraisée empreinte hexagonale creuse de 8x25	AV 8638250
28	3	Tirant de pietement	AS 610128A
29	1	Tube	AT 610138A
30	4	Ecrou frein de 6	KAV 7010060
31	1	Pied	FB 610591
32	1	Porte décorative gauche	F 610642U
33	1	Porte décorative droite	F 610641U
34	4	Clou Ø10	AS 610133B
35	1	Registre d'arrivée d'air secondaire	ED RES-1000
36	1	Façade	FB 610581
37	1	Porte	FB 610585
38	1	Axe de porte haut, goupille cannelée de 6x40	AV 6306400
39	1	Axe de porte bas, goupille cannelée de 6x40	AV 6306400
40	2	Vis tête fraisée empreinte hexagonale creuse de 6x30	AV 8636300
41	1	Loquet de fermeture	FB 610596
42	1	Rondelle élastique de 8	AV 4170081
43	1	Vis de fixation du loquet de fermeture	AS 610155A
44	1	Main froide (poignée)	ED HAN-1002
45	1	Ecrou bas de réglage de fermeture	AV 7130060
46	1	Bague de roulement fermeture (entretoise)	AS 610153A
47	1	Excentrique de réglage de fermeture	AS 610125A
48	1	Vitre	AX 611044
49	4	Attache de vitre	AS 700262
50	6	Vis tête cylindrique de 4x6	AV 8644062
51	1	Cendrier	AT 610136A
52	1	Plaque signalétique	PS 611003
53	2	Rivet de 3x8	AV 5203080
54	2	Rondelle entretoise	AS 610132A
55	2	Lamelle ressort	AS 610124A
56	2	Joint de buse et de tampon Ø5, longueur 0.635 mètres	AI 303005
57	1	Joint de sole foyère Ø8, longueur 0.5 mètres	AI 303008
58	1	Joint de façade Ø8, longueur 3.3 mètres	AI 303008
59	1	Joint de porte/vitrage Ø5, longueur 2.2 mètres	AI 303005
60	1	Joint de façade plat, 0.805 mètres	AI 302001
61	4	Ressort de blocage	AS 610134A
62	1	Joint thermocode Ø12, longeur 1.23 mètres	AI 303012
63	1	Support de poignée	ED HAN-1001
64	1	Laine isolante	ED HSW-0001
65	1	Support de laine isolante	ED HSF-1001
66	1	Laine isolante	

INVICTA STOVE AND FIREPLACES ARE DESIGNED AND MANUFACTURED BY:
INVICTA GROUP SASU
785 520 180 R.C.S. SEDAN
Greffe du Tribunal de Commerce de SEDAN
Siège social
INVICTA GROUP SASU
ZI LA GRAVETTE
08350 DONCHERY
www.invicta.fr

Imported by / Importé par :
Energy distribution
1361 Denison
St-Alphonse, QC J0E 2A0 – Canada
1-877-257-2251
www.energydistribution.co
www.invictastoves.com

APPENDIX 8: Photographs of test set up

Dilution picture Dia 8

Picture 1: Sampling system

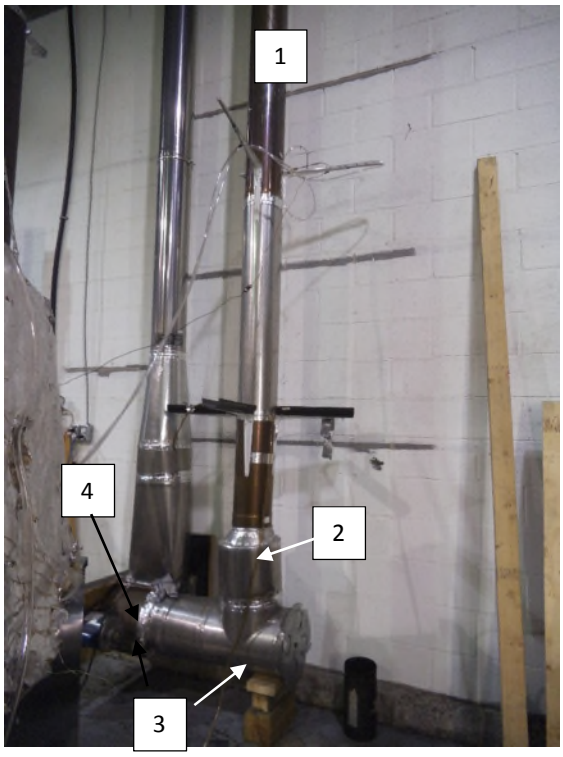

1 : 8 in dia Stainless steel pipe

2 : 16 in. Between sampling probe and lower elbow

3 : Air intake with damper to adjust flow rate

4 : Exhaust blower

Picture 2: Hood and mixing baffle

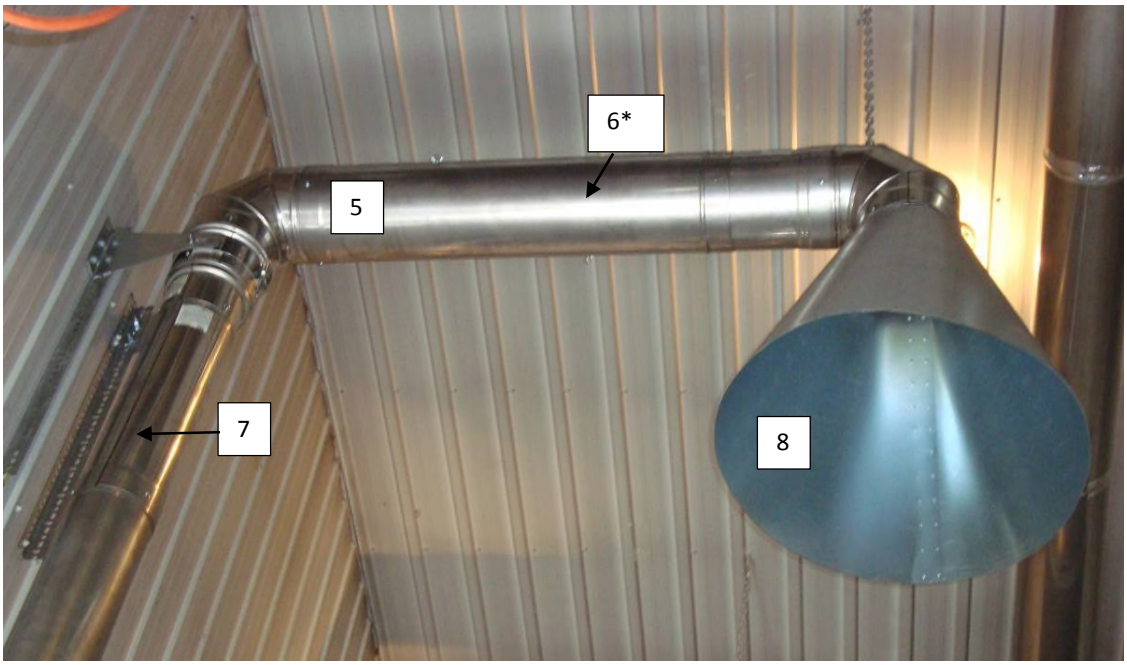

*The arrow point the deflectors inside of the pipe

5 : 8 in. dia. Stainless steel pipe

6 : Mixing baffle (2) location 1 foot between baffles

7 : 10 feet long between velocity port and upper elbow

8 : 48 in. dia. Galvanized steel smoke captures hood

Picture 3: Stack sampling

Picture 3.1: Gas analysis and temperature probe

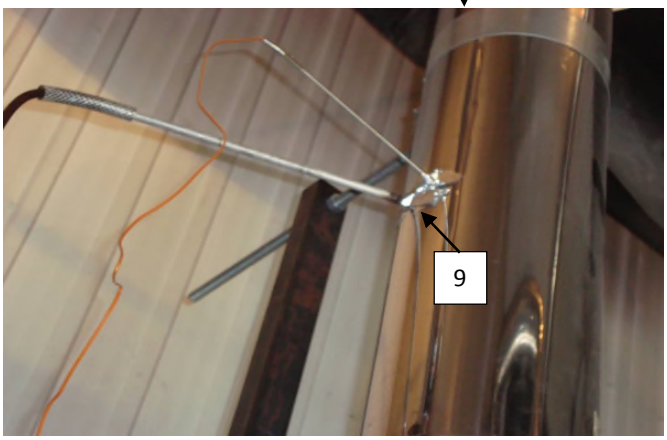

Picture 3.2: chimney support

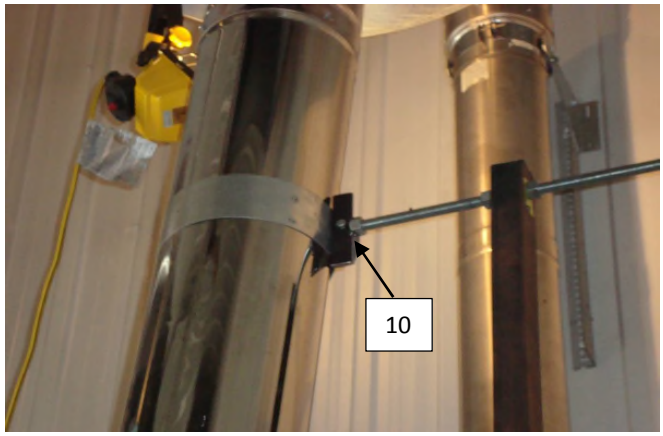

9 : Temperature and gas analyser sampling ports located 9 feet above platform

10 : Exhaust system support bracket

Picture 4: Tunnel flow measurement and sampling probe

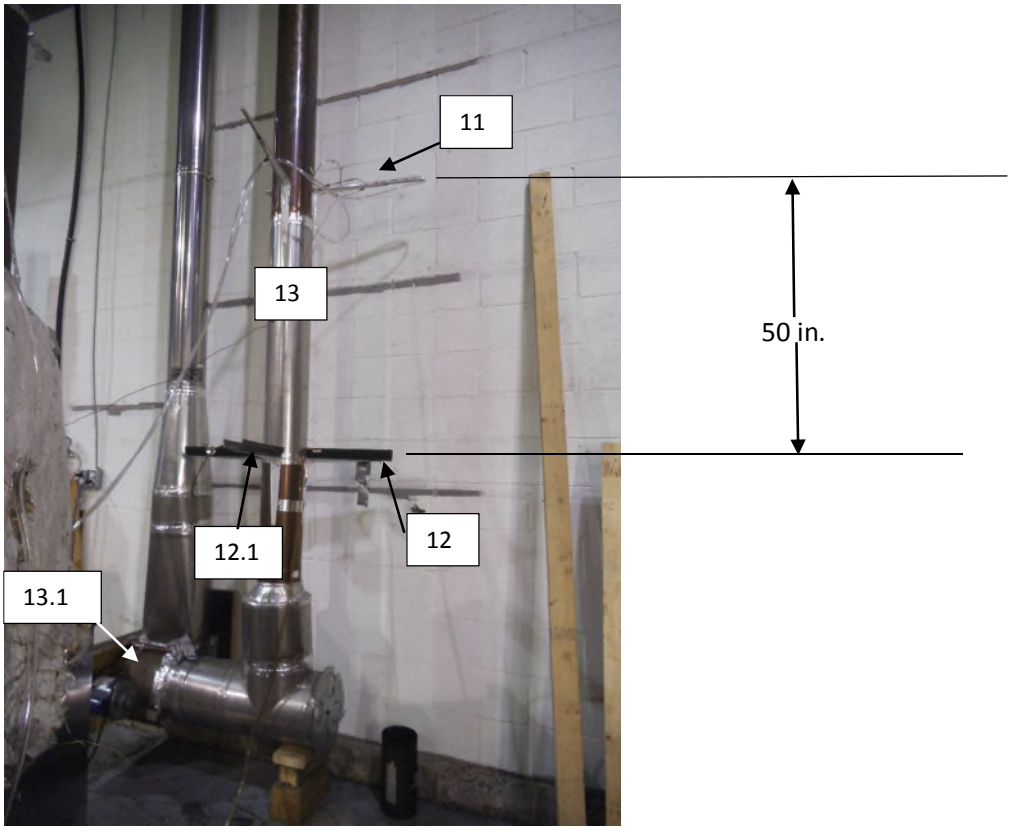

11 : Velocity port

12 :Sampling port, 2 sampling probes with 2x48 mm. dia.filter each. Filter used: Millipore AP4004700

12.1 :Sampling port, sampling probes with 2x48 mm. dia.filter each. Filter used: Millipore AP4004700, for first hour sampling

13 :18 feet long dilution tunnel

13.1 :Extraction blower

Picture 5: Draft sampling

14 : Draft sampling port located 6 in.from the flue outlet

Picture 6: Equipments

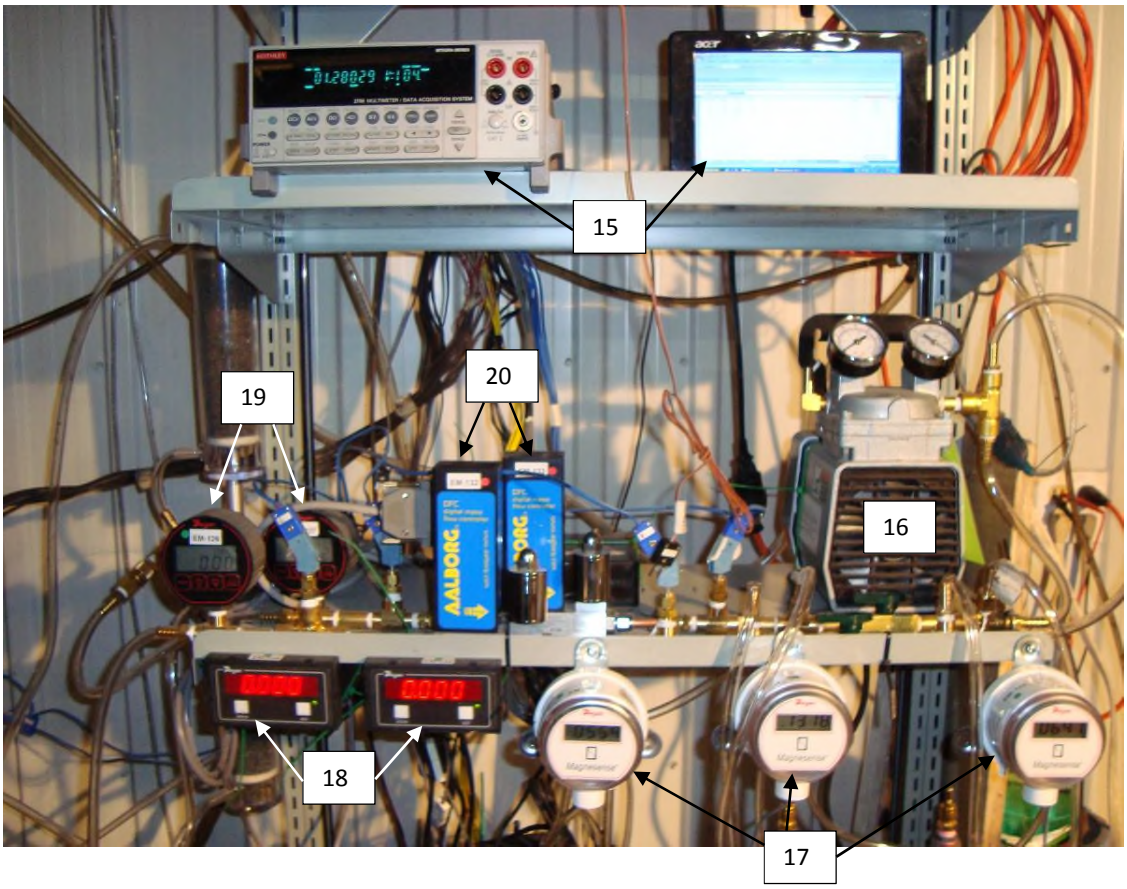

15	: Acquisition system
16	: Vacuum pump
17	: Digital manometer
18	: Digital read out for mass flow meter
19	: Digital vacuum gage
20	: Mass flow meter

Picture 7: Gaz analyser

Picture 8: Reference dry gas meter

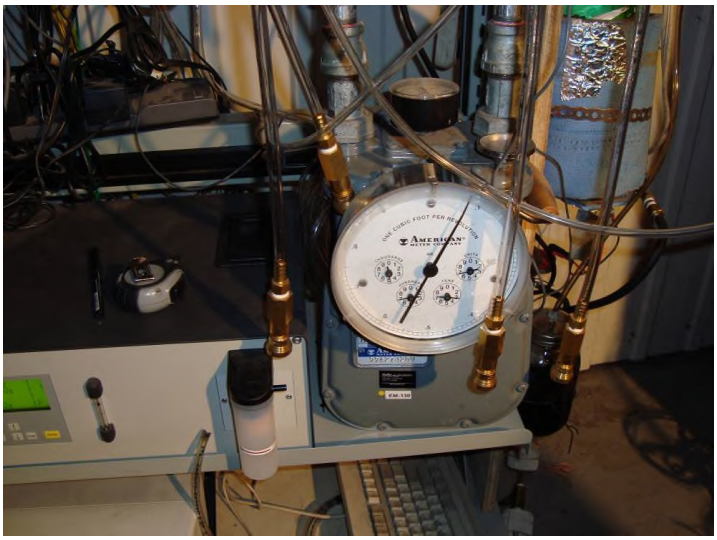

Picture 9: Heat exchanger

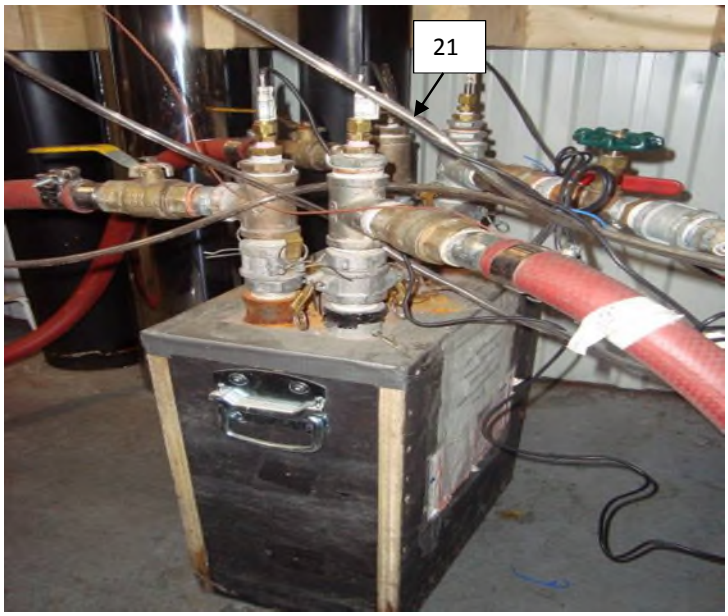

21 : PT 100 insertion probe

Picture 10: Water flow meter

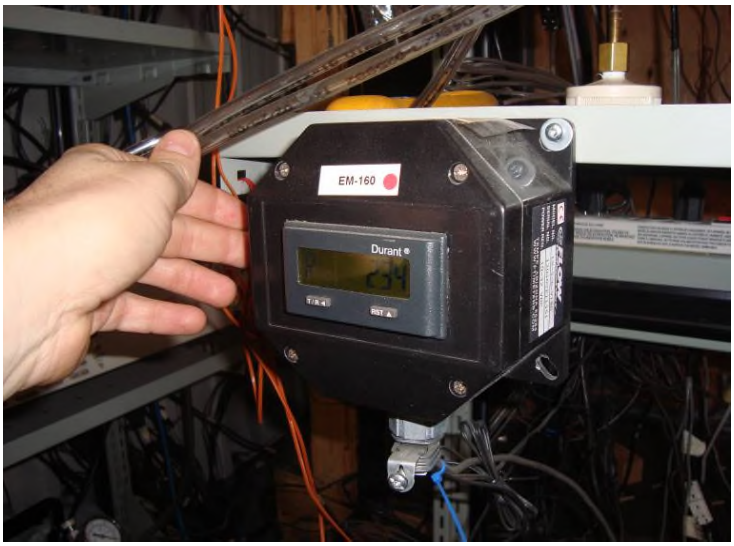

Picture 11: Dry gas meter

Picture 12 : Dilution tunnel sample system

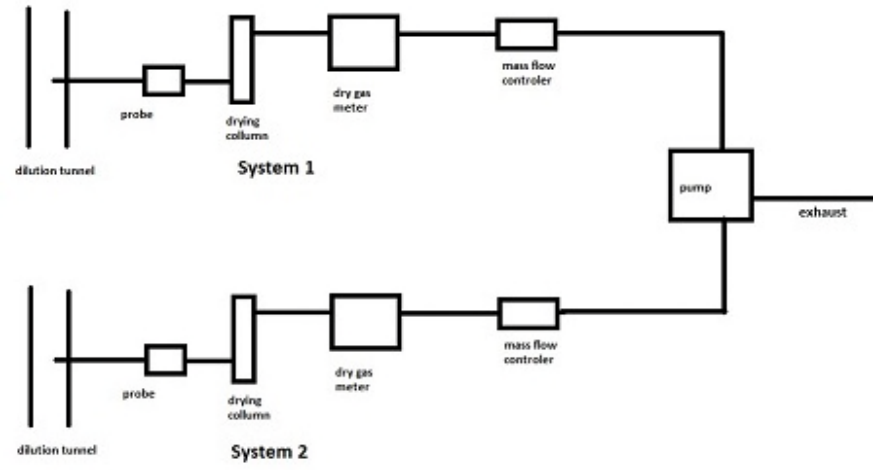

Picture 13: Dilution tunnel

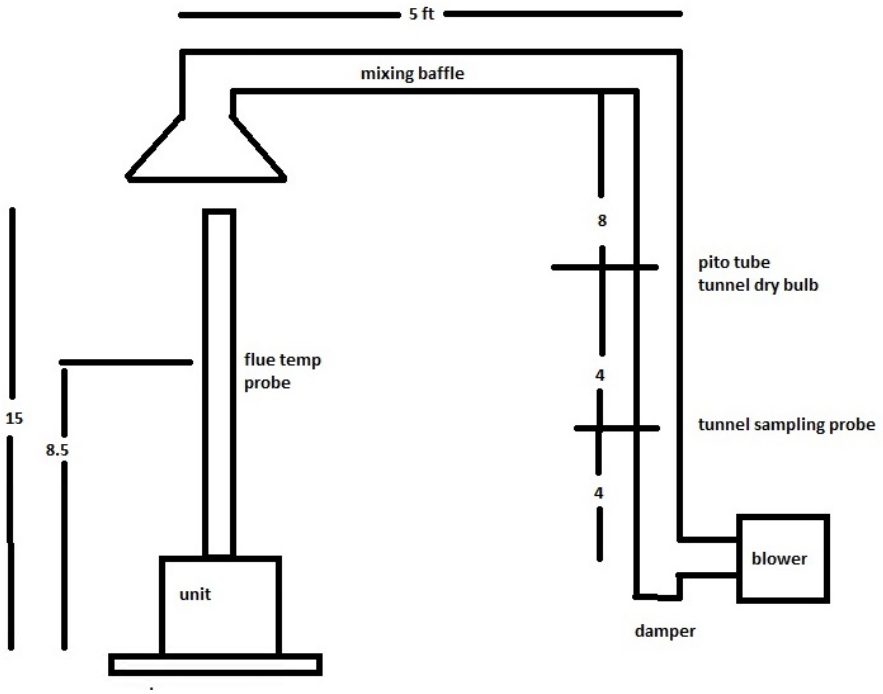

APPENDIX 9: Test load photographs

POLYTESTS
TESTING THROUGH YOUR REALITY

Run 1

POLYTESTS
TESTING THROUGH YOUR REALITY

Run 2

APPENDIX 10: Laboratory Operating Procedures

APPENDIX 11: Sample calculations

APPENDIX 12: Volume calculations

Volume calculation Invicta Gaya Ardoise

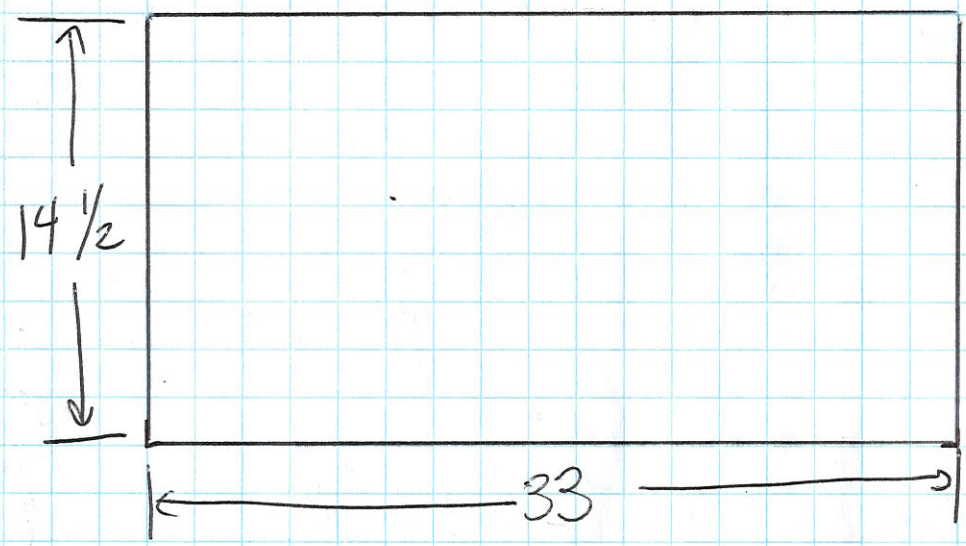

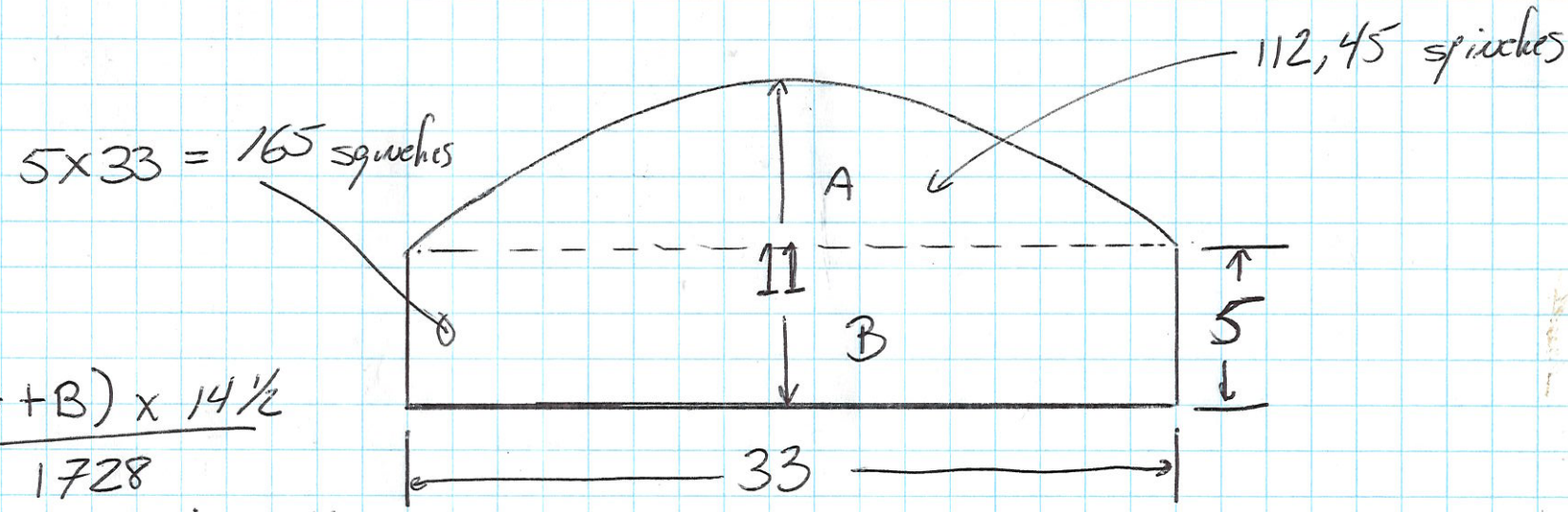

$$\text{Volume } (ft^3) = \frac{(A+B) \times 14\tfrac{1}{2}}{1728}$$

$$V = \frac{(165 + 112.45) \times 14\tfrac{1}{2}}{1728}$$

Volume = 2,32 cu ft

APPENDIX 13: Operating instruction

Energy Distribution Invicta Gaya Ardoise operating procedures

- Start the fire with 4.3 lbs of kindling, with the door slightly open
- At 3.6 lbs, close the door
- At 1 lbs insert preload and keep door slightly open
- At 13.5 lbs close the door
- At 3.2 lbs insert the load start the pump, close the door.

APPENDIX 14: Drawing Air flow pattern

APPENDIX 15: Alternative Esthetic description

Poêle à bois GAYA ARDOISE

référence 6117 44

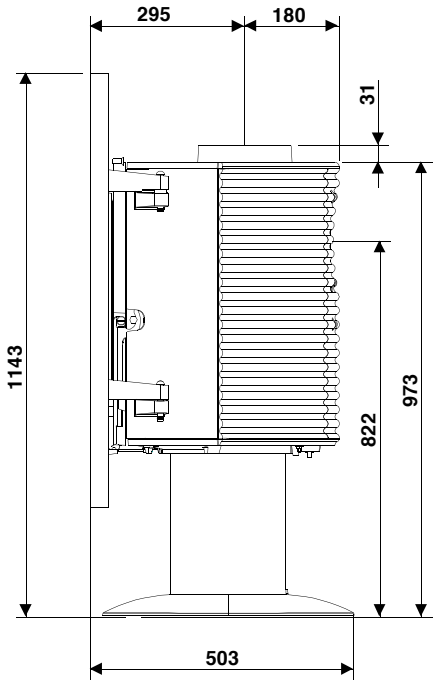

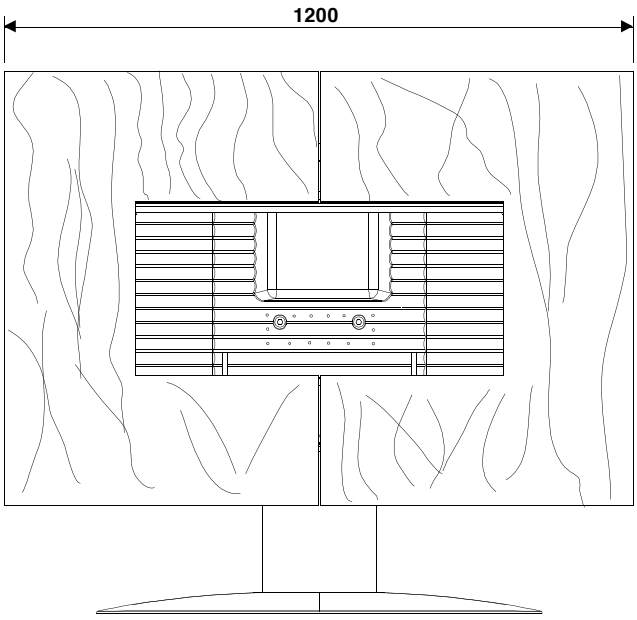

Masse de l'appareil	**206** kg		
Chambre de combustion	Avec système de post combustion		
Raccordement au conduit de fumée par une des buses situées sur le dessus ou à l'arrière de l'appareil	diamètre 180 mm		
Encombrement	h **1143** mm	lg **1200** mm	prof **503** mm
Dimensions hors buse (horizontal et verticale)	h **899** mm	prof **480** mm	
Dimensions de la porte	h **540** mm	lg **850** mm	
Dimensions de la vitre	h **370** mm	lg **740** mm	
Plaque signalétique	Gravé sur le dessous du cendrier		

AD611044

Poêle à bois ITAYA

référence 6110 44

It's a declination of the Gaya Ardoise. The difference are that it doesn't have a decorative cast iron surround in front of the door and instead of a pedestral, we use 3 curved legs.

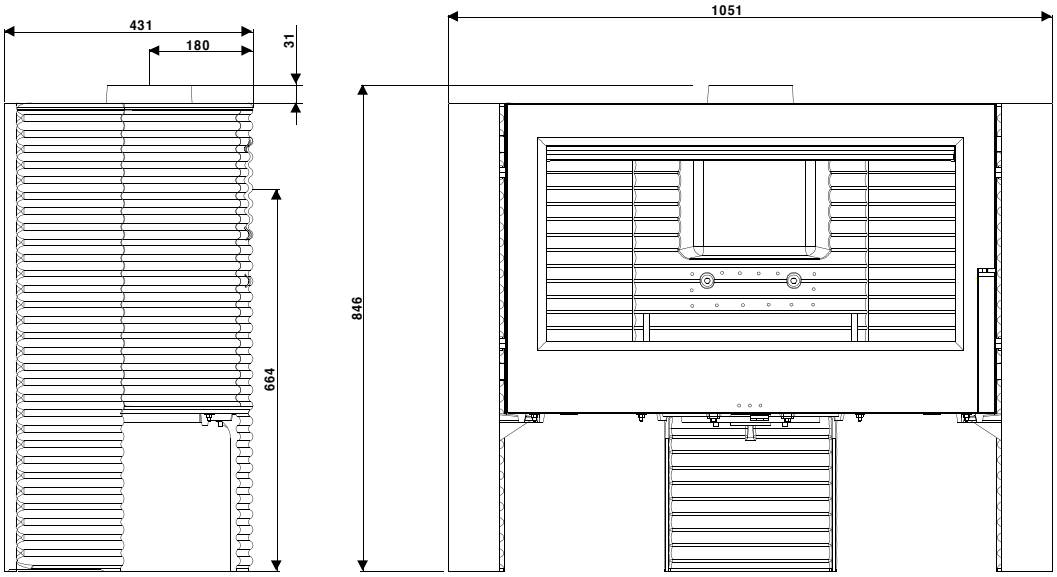

Masse de l'appareil	**187** kg		
Chambre de combustion	Avec système de post combustion		
Raccordement au conduit de fumée par une des buses situées sur le dessus ou à l'arrière de l'appareil	diamètre 180 mm		
Encombrement	h **846** mm	lg **1051** mm	prof **431** mm
Dimensions hors buse (horizontal et verticale)	h **846** mm	prof **462** mm	
Dimensions de la porte	h **540** mm	lg **850** mm	
Dimensions de la vitre	h **370** mm	lg **740** mm	
Plaque signalétique	Gravé sur le dessous du cendrier		

Poêle Cheminée ONYX

référence 6120 46

We removed the pedestral and the cast iron surround in front of the door. We then install a steel frame around the stove to transform it into a fireplace.

Description et installation

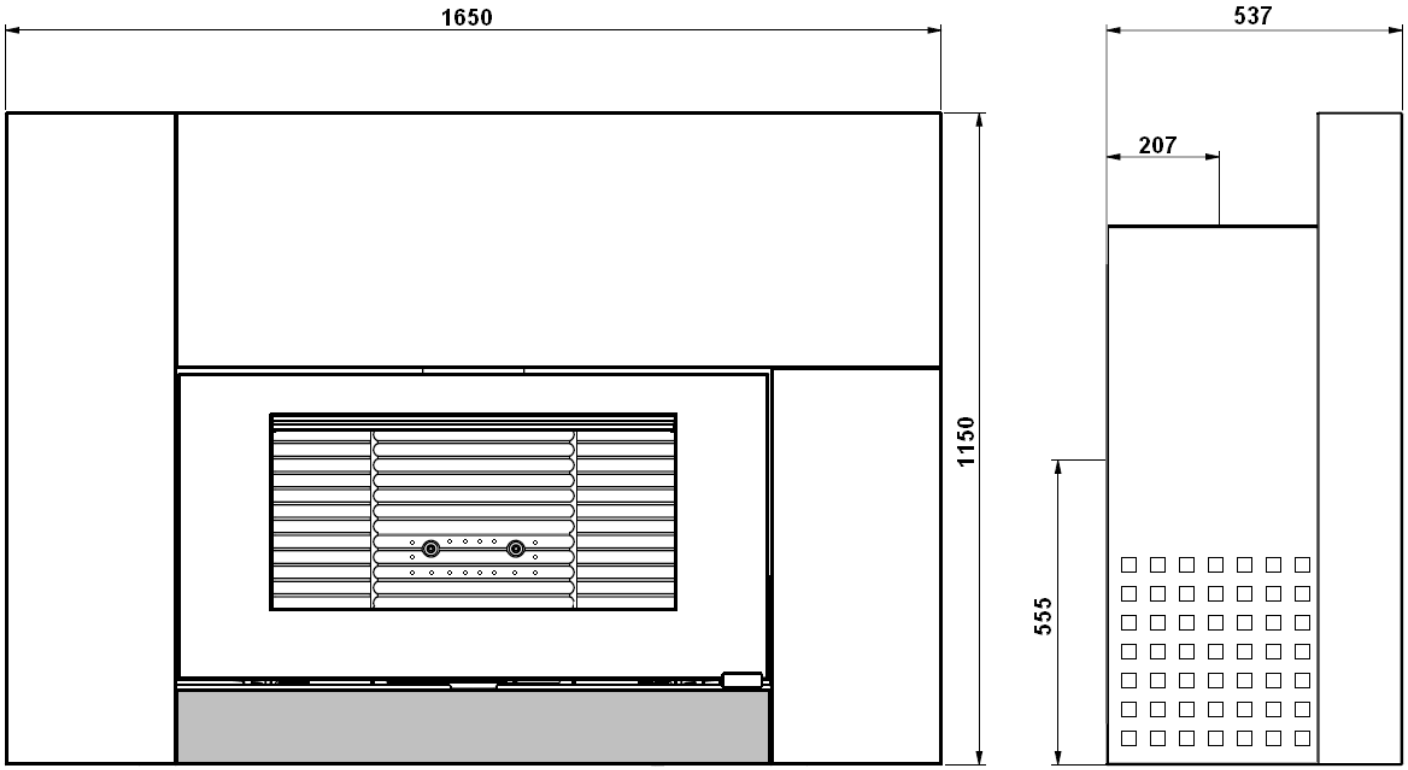

Masse de l'appareil	**284** kg		
Raccordement au conduit de fumée par une des buses situées sur le dessus ou à l'arrière de l'appareil	diamètre 180 mm		
largeur utile pour le chargement des bûches	71 cm - Chargement façade		
Encombrement	h **1150** mm	lg **1650** mm	prof **537** mm
Dimensions de la porte	h **540** mm	lg **1034** mm	
Dimensions de la vitre	h **370** mm	lg **740** mm	
Plaque signalétique	rivetée à l'arrière du cendrier		

Poêle Cheminée ONYX

référence 6120 46

Pour limiter l'échauffement des parois de l'habitation à proximité de la cheminée à 65K (K = degrés Celsius au dessus de la température ambiante), il est nécessaire de respecter le principe des dispositions des schéma ci-après.
Ces précautions ne sont pas nécessaire si les parois environnantes sont en matériaux incombustibles et ne se dégradant pas sous l'action de la chaleur.

Vue de dessus de l'installation du poêle cheminée : L'appareil est plaqué contre le mur d'adossement

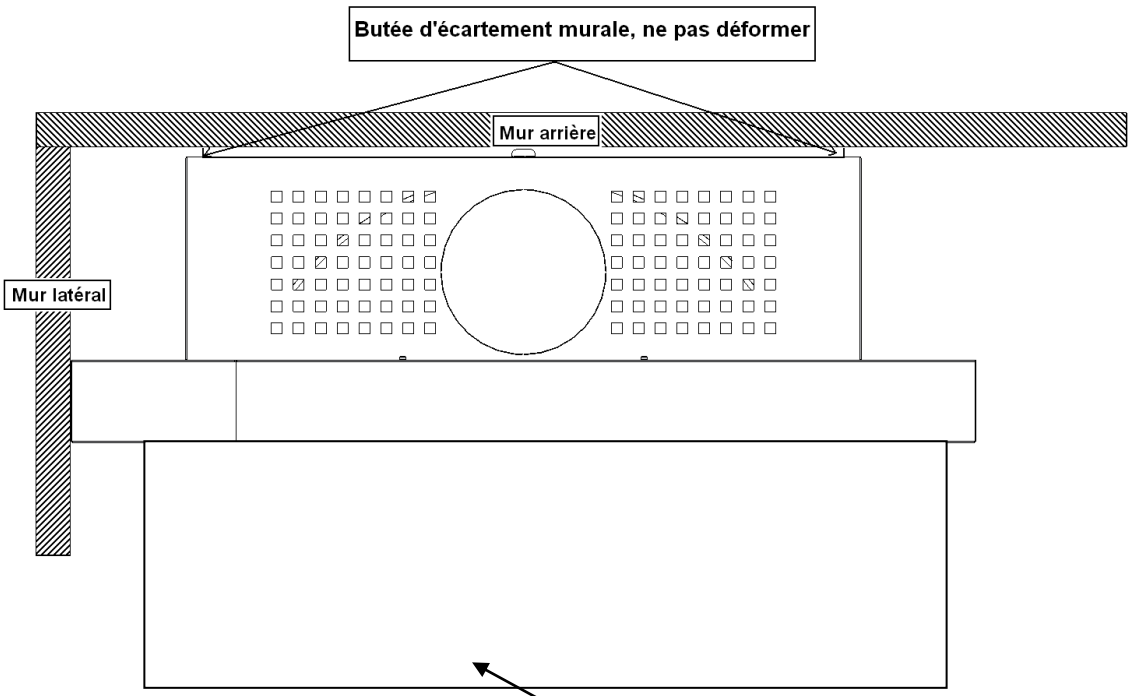

placer une protection sous et jusqu'à une distance de 1 mètre devant l'appareil, (par ex. : sole carrelée ou une plaque métallique réfléchissante.)

Vue de côté de l'installation du poêle cheminée :

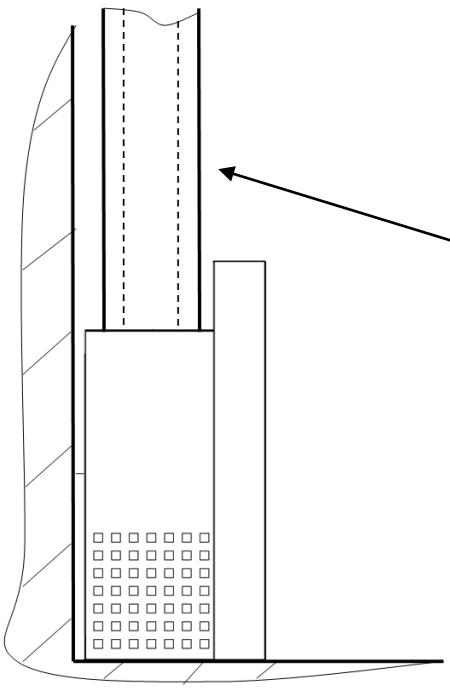

Pour éviter l'échauffement du mur vertical en face du conduit effectuer le raccordement en conduit « double parois isolé » ou en conduit simple protégé par un dispositif pare-rayonnement.

AD611844

Poêle à bois GAYA FEUILLE

référence 6118 44

It's the Gaya Ardoise with a different design cast iron surround in front of the door.

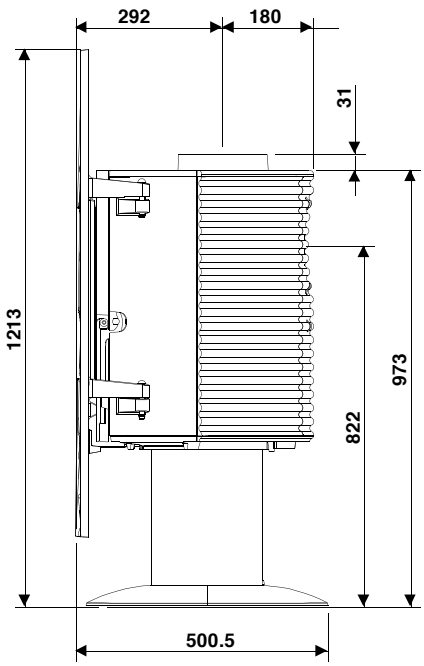

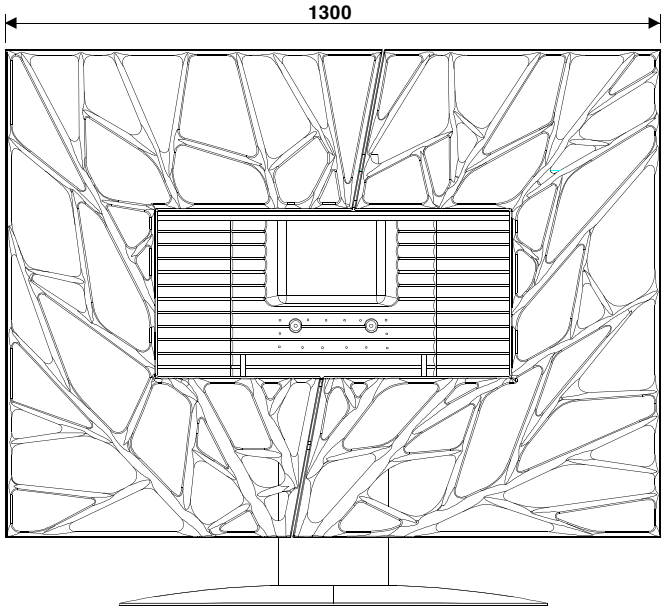

Masse de l'appareil	**214** kg		
Chambre de combustion	Avec système de post combustion		
Raccordement au conduit de fumée par une des buses situées sur le dessus ou à l'arrière de l'appareil	diamètre 180 mm		
Encombrement	h **1213** mm	lg **1300** mm	prof **500.5** mm
Dimensions hors buse (horizontal et verticale)	h **899** mm	prof **480** mm	
Dimensions de la porte	h **540** mm	lg **850** mm	
Dimensions de la vitre	h **370** mm	lg **740** mm	
Plaque signalétique	Gravée sous le cendrier		

Poêle à bois Symphonia

référence 6115 44

It's the Gaya Ardoise with a different design cast iron surround in front of the door.

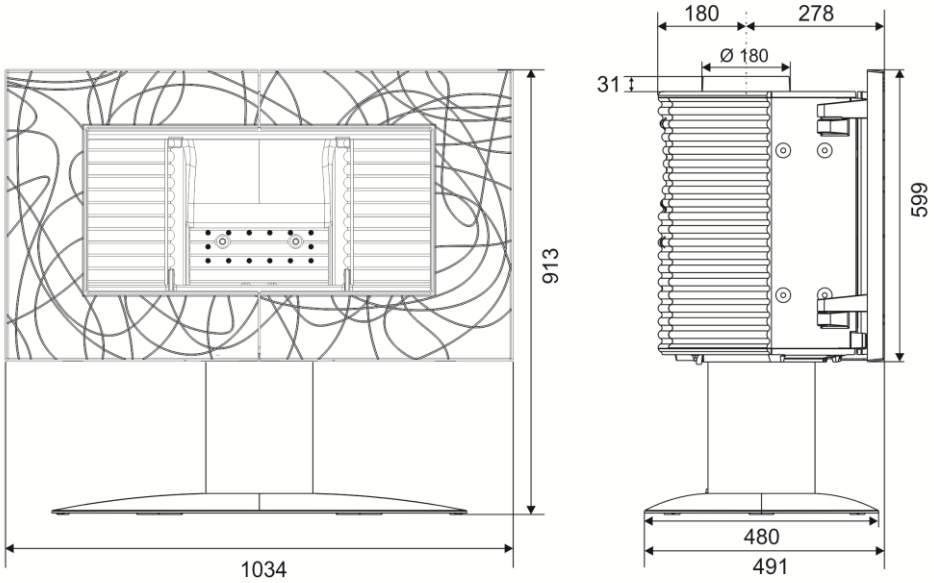

Masse de l'appareil	**199** kg		
Chambre de combustion	Avec système de post combustion		
Raccordement au conduit de fumée par une des buses situées sur le dessus ou à l'arrière de l'appareil	diamètre 180 mm		
Encombrement	h **913** mm	lg **1034** mm	prof **491** mm
Dimensions hors buse (horizontal et verticale)	h **913** mm	prof **491** mm	
Dimensions de la porte	h **540** mm	lg **850** mm	
Dimensions de la vitre	h **370** mm	lg **740** mm	
Plaque signalétique	Gravé sur le dessous du cendrier		

AD611444

Poêle à bois ANTAYA

référence 6114 44

It's the Gaya Ardoise but without a cast iron surround in front of the door.

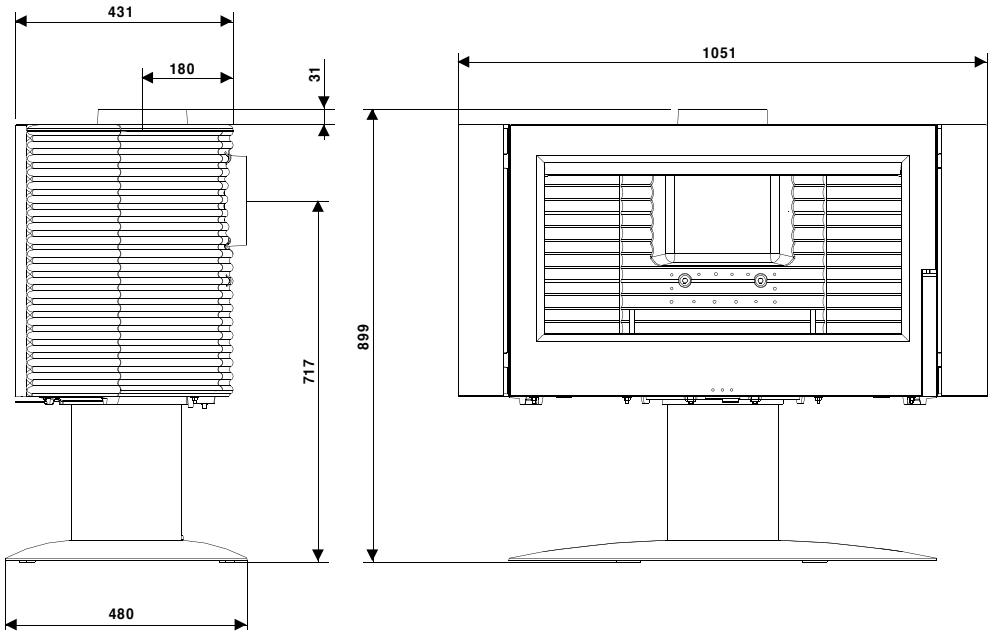

Masse de l'appareil	**188** kg		
Chambre de combustion	Avec système de post combustion		
Raccordement au conduit de fumée par une des buses situées sur le dessus ou à l'arrière de l'appareil	diamètre 180 mm		
Encombrement	h **899** mm	lg **1051** mm	prof **480** mm
Dimensions hors buse (horizontal et verticale)	h **899** mm	prof **480** mm	
Dimensions de la porte	h **540** mm	lg **850** mm	
Dimensions de la vitre	h **370** mm	lg **740** mm	
Plaque signalétique	Gravé sur le dessous du cendrier		

Poêle à bois THEÏA

AD611037
référence 6113 44

It's the Gaya Ardoise with a different design cast iron surround in front of the door.

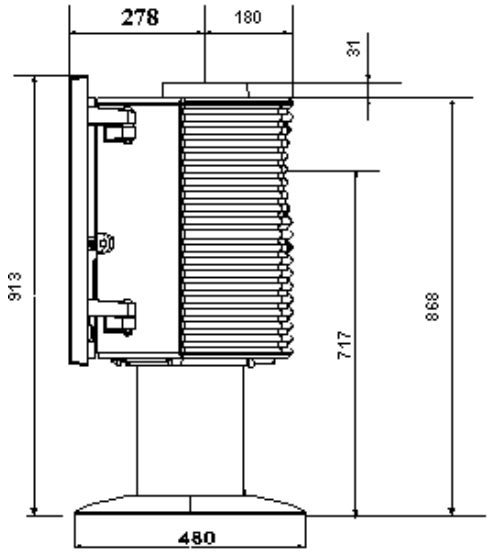

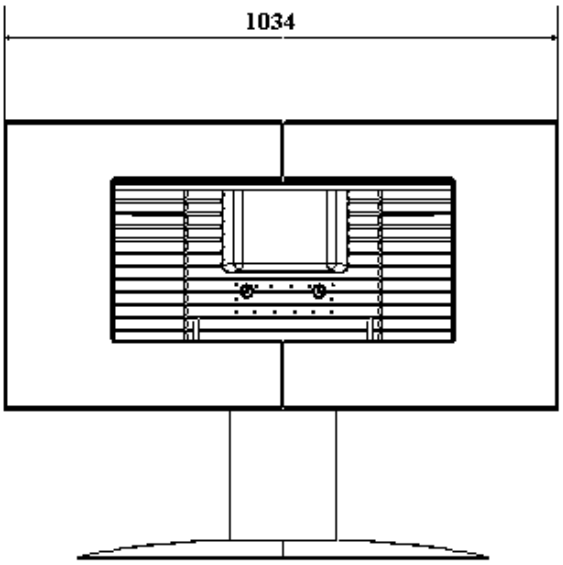

Masse de l'appareil	**220** kg		
Chambre de combustion	Avec système de post combustion		
Raccordement au conduit de fumée par une des buses situées sur le dessus ou à l'arrière de l'appareil	diamètre 180 mm		
Encombrement	h **913** mm	lg **1034** mm	prof **475** mm
Dimensions hors buse (horizontal et verticale)	h **899** mm	prof **475** mm	
Dimensions de la porte	h **540** mm	lg **850** mm	
Dimensions de la vitre	h **370** mm	lg **740** mm	
Plaque signalétique	Gravé sur le dessous du cendrier		

AD611044

Poêle à bois AKAN

référence 6111 44

It's the Gaya Ardoise with a different design cast iron surround in front of the door.

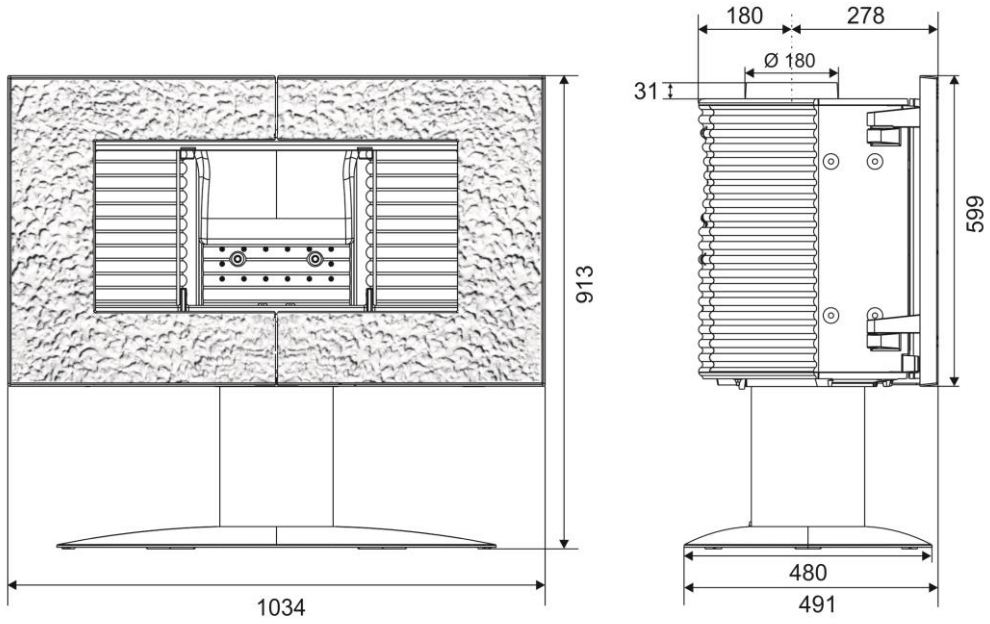

Masse de l'appareil	**220** kg		
Chambre de combustion	Avec système de post combustion		
Raccordement au conduit de fumée par une des buses situées sur le dessus ou à l'arrière de l'appareil	diamètre 180 mm		
Encombrement	h **913** mm	lg **1034** mm	prof **491** mm
Dimensions hors buse (horizontal et verticale)	h **913** mm	prof **491** mm	
Dimensions de la porte	h **540** mm	lg **850** mm	
Dimensions de la vitre	h **370** mm	lg **740** mm	
Plaque signalétique	Gravé sur le dessous du cendrier		